- **WLCSP-6-P6**

Unit: mm

PACKAGE DIMENSIONS

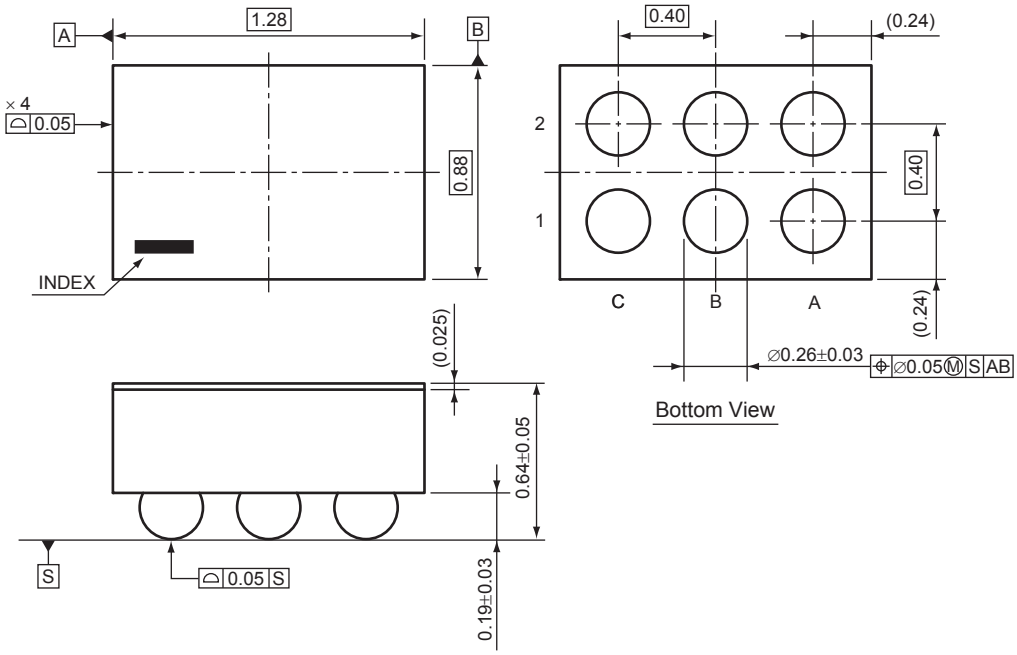

TAPING SPECIFICATION

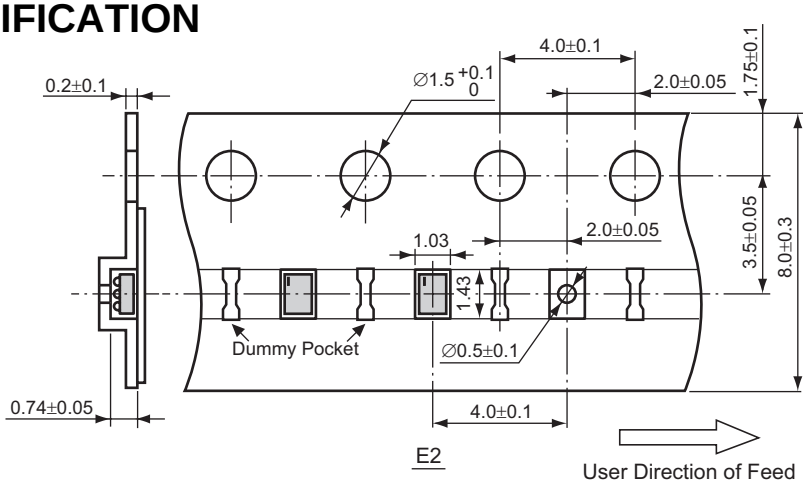

TAPING REEL DIMENSIONS REUSE REEL (EIAJ-RRM-08Bc)

1 reel = 5,000 pcs

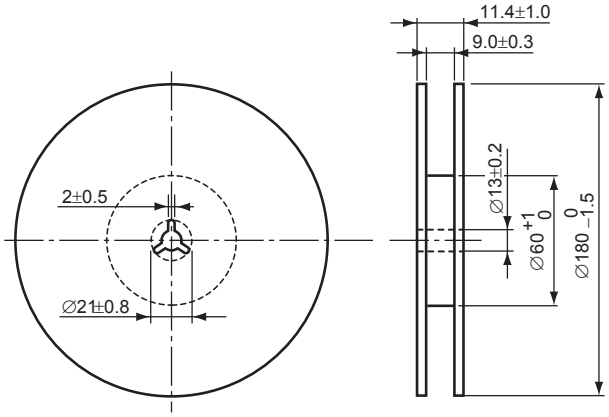

POWER DISSIPATION (WLCSP-6-P6)

Power Dissipation (P_D) depends on conditions of mounting on board. This specification is based on the measurement at the condition below:

Measurement Conditions

	JEDEC STD. 51-9 Test Land Pattern
Environment	Mounting on Board (Wind velocity = 0 m/s)
Board Material	Glass cloth epoxy plastic (Four-Layer Board)
Board Dimensions	101.5 mm × 114.5 mm × 1.6 mm
Copper Ratio	Outer Layers (First and Fourth Layers): Approx.60% Inner Layers (Second and Third Layers): Approx. 100%

Measurement Result (Ta = 25°C, Tjmax = 125°C)

	JEDEC STD. 51-9 Test Land Pattern
Power Dissipation	910 mW
Thermal Resistance	$\theta ja = (125 - 25°C)/0.91\ W = 109°C/W$

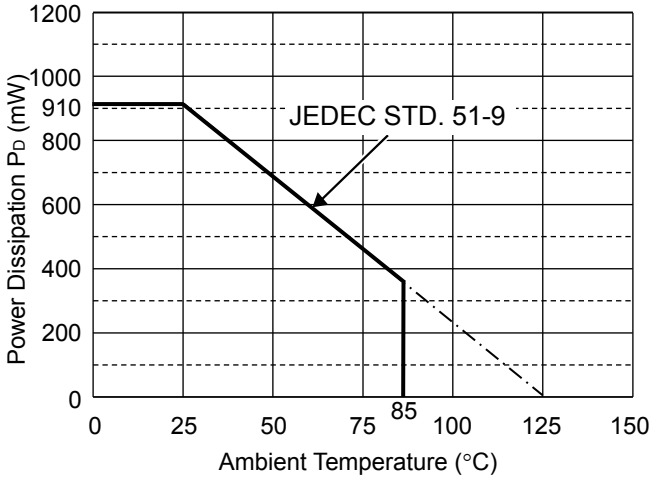

Power Dissipation PD vs. Ambient

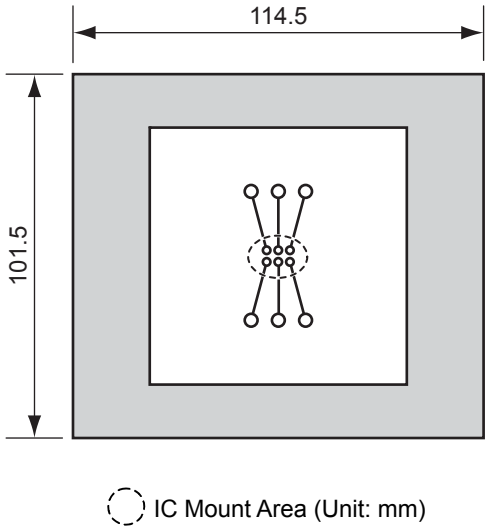

Measurement Board Pattern

RECOMMENDED LAND PATTERN

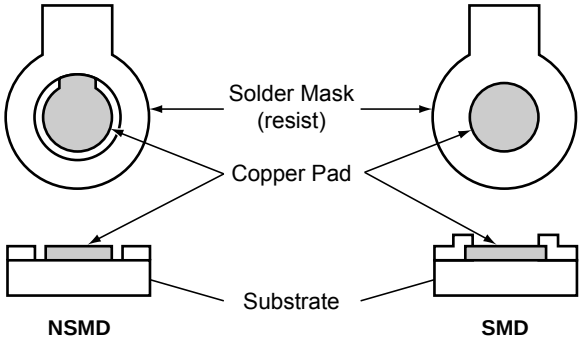

NSMD and SMD Pad Definition

Pad definition	Copper Pad	Solder Mask Opening
NSMD (Non-Solder Mask defined)	0.23 mm	Min. 0.33 mm
SMD (Solder Mask defined)	Min. 0.33 mm	0.23 mm

Pad layout and size can be modified by customers material, equipment, method.
Please adjust pad layout according to your conditions.
Recommended Stencil Aperture Size....ø0.28 mm
Since lead free WL-CSP components are not compatible with the tin/lead solder process, you shall not mount lead free WL-CSP components using the tin/lead solder paste.