RP505K Series

1A* PWM/VFM Step-down DC/DC Converter with Synchronous Rectifier

The RP505K Series are low supply current CMOS-based PWM/VFM step-down DC/DC converters with synchronous rectifier. RP505K can be selected from two control types by input signal to the MODE pin - forced PWM control or PWM/VFM auto switching control in which mode automatically switches to high-efficiency VFM mode in low output current. The xx1A/B version with an internally fixed output voltage type and the 001C version with an externally adjustable output voltage type are available. RP505K includes a soft start circuit, an under-voltage lockout circuit (UVLO), thermal shutdown circuit and a latch protection circuit. By simply using an inductor and capacitors (and resistors) as external components, a high-efficiency step-down DC/DC converter can be easily configured. The small inductor (2.2μH) and output capacitor (10μF) can be used by the switching of 2.25MHz. A 2mm square compact DFN(PLP)2020-8 package is available.

FEATURES

- Supply Current (I_{DD1}) ····· Typ. 500μA (Switching)
- Supply Current (I_{DD2}) ····· Typ. 40μA (No switching, VFM)
- Supply Current (I_{DD2}) ····· Typ. 500μA (No switching, PWM)
- Standby Current ($I_{standby}$) ····· Typ. 0μA (CE="L")
- Input Voltage Range (V_{IN}) ····· 2.3V to 5.5V (V_{SET} ≥ 0.8V, Absolute maximum rating : 6.5V)
- Output Voltage Range (V_{OUT}) ··· 0.6V to 3.3V** (Internally fixed, RP505Kxx1A/B)
  0.8V to 3.3V (Externally djustable, RP505K001C)
  (Feedback Voltage : 0.6V)
- Output Voltage Accuracy ····· ± 1.5% (Feedback Voltage Accuracy : ± 9mV)
- Output Current (I_{OUT}) ····· 1A*
- Oscillator Frequency (f_{osc}) ····· 2.25MHz
- Oscillator Maximum Duty Cycle (Maxduty) ··· Min. 100%
- UVLO Detect Voltage (V_{UVLO}) ····· Typ. 2.0V
- Soft Start Time (t_{start}) ····· Typ. 0.15ms
- Thermal Shutdown Circuit ····· Stops at 140°C.
- Coil-current Limit Circuit ····· Current limit Typ. 1.7A
- Latch Protection Circuit ····· Delay time for protection Typ. 1.5ms
- Auto-discharge Function ····· B Version
- MODE Pin ····· "H": forced PWM control, "L": PWM/VFM auto switching control
- Package ····· DFN(PLP)2020-8

*) This is an approximate value, because output current depends on conditions and external parts.
**) For less than 0.8V, the input voltage range is limited. For details, please refer to the datasheet.

BLOCK DIAGRAMS

RP505Kxx1A/B
(Internally fixed output voltage type)

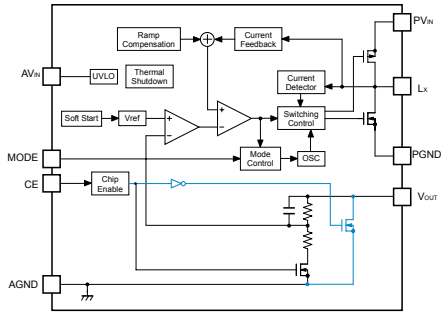

Blue line : only RP505Kxx1B

RP505K001C
(Externally adjustable output voltage type)

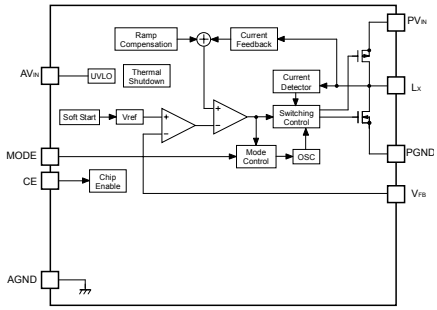

SELECTION GUIDES

Halogen Free	Package	Q'ty per Reel	Part No.
H/F	DFN(PLP)2020-8	5,000 pcs	RP505Kxx1*-TR
			RP505K001$-TR

xx : Specify the output voltage within the range of 0.6V (06) to 3.3V (33) in 0.1V steps.
(For externally adjustable output voltage type (00))
* : Select from (A) internally fixed output voltage type, without auto-discharge function or
(B) internally fixed output voltage type, with auto-discharge function.
$: (C) externally adjustable output voltage type, without auto-discharge function

TYPICAL APPLICATIONS

RP505Kxx1A/B

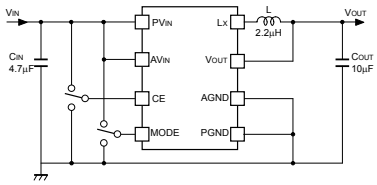

RP505K001C

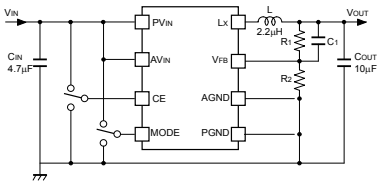

L : MIPSA2520D2R2 (FDK)
C_{IN} : C1608JB0J475K (TDK)
C_{OUT} : C1608JB0J106M (TDK)

Set Output Voltage	Inductor
0.6V ≤ V_{SET} < 1.6V	1.0μH or more
1.6V ≤ V_{SET} ≤ 2.3V	1.5μH or more
2.3V < V_{SET} ≤ 3.3V	2.2μH or more

PACKAGE

DFN(PLP)2020-8

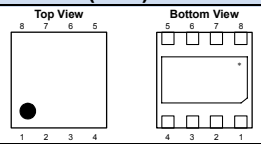

1	MODE	5	Lx
2	CE	6	PGND**
3	AV_{IN}**	7	AGND**
4	PV_{IN}**	8	V_{OUT} or V_{FB}

*) The tab is substrate level (GND).
**) No.3 pin and No.4 pin, No.6 pin and No.7 pin must be wired together when it is mounted on board.

TYPICAL CHARACTERISTIC

RP505K331x Efficiency vs. Output Current

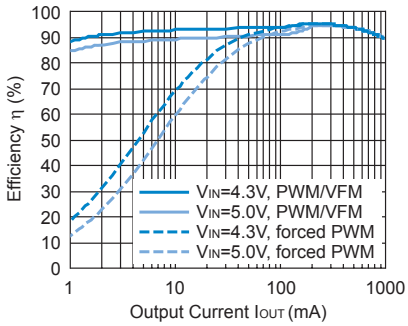

APPLICATIONS

- Power source for battery-powered equipment
- Power source for Wireless LAN terminals
- Power source for hand-held communication equipment, cameras, and VCRs

1A* PWM/VFM Step-down DC/DC Converter with Synchronous Rectifier

RP50x Series 1A
Step-down DC/DC Converter Comparison

	RP505K Series	RP501K Series
Control	PWM/VFM automatic shift / Forced PWM (It can be switched by MODE pin)	PWM/VFM automatic shift/ Fixed PWM (It can be switched by MODE pin)
Output Current*	1A	1A
Supply Current (PWM Mode)	Typ. 500μA	Typ. 450μA
Supply Current (VFM Mode)	Typ. 40μA	Typ. 140μA
Supply Current (Standby Mode)	Typ. 0μA	Typ. 0μA
Input Voltage Range	2.3V to 5.5V	2.5V to 5.5V
Output Voltage Range	0.6V to 3.3V** **) For less than 0.8V, the input voltage range is limited. Externally adjustable	1.0V to 3.3V
Output Voltage Accuracy	±1.5%	±1.5%
Oscillator Frequency	Typ. 2.25MHz	Typ. 2.25MHz
Oscillator Maximum Duty Cycle	Min.100%	Min.100%
UVLO Detect Voltage	Typ. 2.0V	Typ. 2.2V
Soft-start Time	Typ. 0.15ms	Typ. 0.14ms
Latch Protection Circuit (Protection Delay Time)	Typ. 1.5ms	Typ. 2.0ms
Coil-current Limit Circuit	Typ. 1.7A	Typ. 1.5A
Inductor	Output Voltage / Inductor 0.6V ≤ V_{OUT} < 1.6V / 1.0μH or more 1.6V ≤ V_{OUT} ≤ 2.3V / 1.5μH or more 2.3V < V_{OUT} ≤ 3.3V / 2.2μH or more	2.2μH to 4.7μH
Package	DFN(PLP)2020-8	DFN(PLP)2527-10
Others	Built-in Thermal shutdown circuit	-
Version	**A Version** Fixed output voltage type, Without auto-discharge function **B Version** Fixed output voltage type, With auto-discharge function **C Version** Adjustable output voltage type, Without auto-discharge function	**A Version** Without auto-discharge function **B Version** With auto-discharge function

*) This is an approximate value, because output current depends on conditions and external parts.

RoHS Compliant
Halogen Free

Ricoh is committed to reducing the environmental loading materials in electrical devices with a view to contributing to the protection of human health and the environment.
Ricoh has been providing RoHS compliant products since April 1, 2006 and Halogen-free products since April 1, 2012.

RICOH ELECTRONIC DEVICES CO., LTD.

http://www.e-devices.ricoh.co.jp/en/

RICOH ELECTRONIC DEVICES CO., LTD.
Higashi-Shinagawa Office (International Sales)
3-32-3, Higashi-Shinagawa, Shinagawa-ku, Tokyo 140-8655, Japan
Phone: +81-3-5479-2857 Fax: +81-3-5479-0502