R5328K Series

Manual Mode Shift Low Voltage Dual 150mA LDO

The R5328K Series are CMOS-based dual output LDO regulators with ECO pin featuring 150mA output. By inputting the control signals to into the ECO pin, the operation can be switched between fast response mode and low power mode of the ECO function. In low power mode, supply current is as low as 2.5µA. In fast response mode, ripple rejection is 70dB and noise is low. R5328K supports low voltage, featuring input voltage from 1.4V and output voltage from 0.8V. Standby mode and auto-discharge function are also available (see Selection Guide). Ceramic capacitors can be used.

FEATURES

- Supply Current (I_{SS1}) ····· Typ. 65µA × 2 (Fast mode, V_{IN}=V_{SET}+1.0V)
- Supply Current (I_{SS2}) ····· Typ. 2.5µA × 2 (Low power mode, same as above)
- Standby Current ($I_{standby}$) ····· Typ. 0.1µA × 2 (V_{IN}=6.0V, CE1/CE2="L")
- Dropout Voltage (V_{DIF}) ····· Typ. 0.25V (Fast mode, I_{OUT}=150mA, V_{SET}=2.8V)
  Typ. 0.255V (Low power mode, same as above)
- Ripple Rejection (RR) ····· Typ. 70dB (f=1kHz, Fast mode)
- Input Voltage Range (V_{IN}) ····· 1.4V to 6.0V (Absolute maximum rating : 6.5V)
- Output Voltage Range (V_{OUT}) ····· 0.8V to 4.0V* (Internally fixed)
- Output Voltage Accuracy ····· ±1% (Fast mode)
  ±1.2% (Low power mode)
- Temp. coeff. of Output Voltage ····· Typ. ±100ppm/°C
- Line Regulation ····· Typ. 0.02%/V (Fast mode)
- Fold-back Protection Circuit ····· Current limit Typ. 50mA
- Auto-discharge Function ····· B Version
- Package ····· DFN(PLP)2020-8
- Ceramic capacitors can be used. ·· 1µF or more

*) For information about combination of output voltage, please check our website.

BLOCK DIAGRAMS

R5328KxxxA
(Without Auto-discharge function)

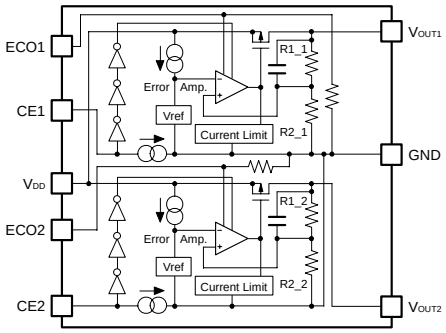

R5328KxxxB
(With Auto-discharge function)

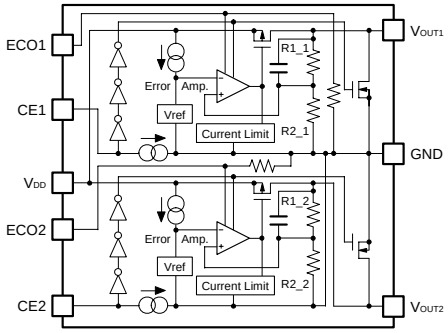

SELECTION GUIDE

Halogen Free	Package	Q'ty per Reel	Part No.
H/F	DFN(PLP)2020-8	5,000 pcs	R5328KXXX*-TR

XXX : Specify a combination of output voltage for each output using serial numbers.
* : Select from (A) without auto-discharge function or (B) with auto-discharge function.

PACKAGE

DFN(PLP)2020-8

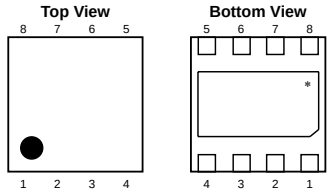

1	GND	5	CE2
2	V_{OUT1}	6	ECO2
3	V_{DD}	7	ECO1
4	V_{OUT2}	8	CE1

*) The tab is substrate level (GND).

TYPICAL CHARACTERISTIC

R5328K (VR1/VR2) Dropout Voltage vs. Output Current

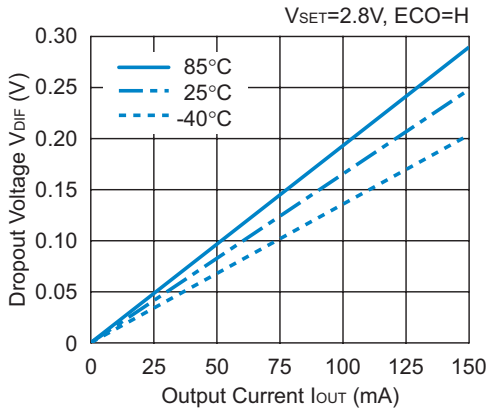

APPLICATIONS

- Power source for hand-held communication equipment, cameras, and VCRs
- Power source for battery-powered equipment
- Power source for home appliances

1. The products and the product specifications described in this document are subject to change or discontinuation of production without notice for reasons such as improvement. Therefore, before deciding to use the products, please refer to Ricoh sales representatives for the latest information thereon.
2. The materials in this document may not be copied or otherwise reproduced in whole or in part without prior written consent of Ricoh.
3. Please be sure to take any necessary formalities under relevant laws or regulations before exporting or otherwise taking out of your country the products or the technical information described herein.
4. The technical information described in this document shows typical characteristics of and example application circuits for the products. The release of such information is not to be construed as a warranty of or a grant of license under Ricoh's or any third party's intellectual property rights or any other rights.
5. The products listed in this document are intended and designed for use as general electronic components in standard applications (office equipment, telecommunication equipment, measuring instruments, consumer electronic products, amusement equipment etc.). Those customers intending to use a product in an application requiring extreme quality and reliability, for example, in a highly specific application where the failure or misoperation of the product could result in human injury or death (aircraft, spacevehicle, nuclear reactor control system, traffic control system, automotive and transportation equipment, combustion equipment, safety devices, life support system etc.) should first contact us.
6. We are making our continuous effort to improve the quality and reliability of our products, but semiconductor products are likely to fail with certain probability. In order to prevent any injury to persons or damages to property resulting from such failure, customers should be careful enough to incorporate safety measures in their design, such as redundancy feature, fire containment feature and fail-safe feature. We do not assume any liability or responsibility for any loss or damage arising from misuse or inappropriate use of the products.
7. Anti-radiation design is not implemented in the products described in this document.
8. Please contact Ricoh sales representatives should you have any questions or comments concerning the products or the technical information.

RoHS Compliant
Halogen Free

Ricoh is committed to reducing the environmental loading materials in electrical devices with a view to contributing to the protection of human health and the environment.
Ricoh has been providing RoHS compliant products since April 1, 2006 and Halogen-free products since April 1, 2012.

RICOH RICOH ELECTRONIC DEVICES CO., LTD.

http://www.e-devices.ricoh.co.jp/en/

Sales & Support Offices

RICOH ELECTRONIC DEVICES CO., LTD.
Higashi-Shinagawa Office (International Sales)
3-32-3, Higashi-Shinagawa, Shinagawa-ku, Tokyo 140-8655, Japan
Phone: +81-3-5479-2857 Fax: +81-3-5479-0502

RICOH EUROPE (NETHERLANDS) B.V.
Semiconductor Support Centre
Prof. W.H. Keesomlaan 1, 1183 DJ Amstelveen, The Netherlands
Phone: +31-20-5474-309

RICOH ELECTRONIC DEVICES KOREA CO., LTD.
3F, Haesung Bldg, 504, Teheran-ro, Gangnam-gu, Seoul, 135-725, Korea
Phone: +82-2-2135-5700 Fax: +82-2-2051-5713

RICOH ELECTRONIC DEVICES SHANGHAI CO., LTD.
Room 403, No.2 Building, No.690 Bibo Road, Pu Dong New District, Shanghai 201203, People's Republic of China
Phone: +86-21-5027-3200 Fax: +86-21-5027-3299

RICOH ELECTRONIC DEVICES CO., LTD.
Taipei office
Room 109, 10F-1, No.51, Hengyang Rd., Taipei City, Taiwan (R.O.C.)
Phone: +886-2-2313-1621/1622 Fax: +886-2-2313-1623