R1501x Series

1A 24V Input VR

The R1501x Series are CMOS-based voltage regulators featuring 1A output current and 24V input voltage. The R1501x series provides high input voltage operation and low on-resistance (at V_{SET}=10V, below 0.6Ω) because of using DMOS transistor. In addition to a fold-back protection circuit built into conventional regulators, R1501x contains a thermal shutdown circuit. Besides the low supply current by CMOS, the operating temperature is -40°C to 105°C and the maximum input voltage is 24V, the R1501x series are very suitable for power source of car accessories*.

***) R1501x Series are suitable for automotive applications. For details, please refer to our "ELECTRONIC DEVICE PRODUCT CATALOG FOR AUTOMOTIVE" or contact us.**

FEATURES

- Supply Current (I_{SS}) ····· Typ. 70μA (V_{IN}=24.0V)
- Standby Current ($I_{standby}$) ····· Typ. 0.1μA (V_{IN}=24.0V, CE="L")
- Dropout Voltage (V_{DIF}) ····· Typ. 0.575V (I_{OUT}=1A, V_{SET}=5.0V)
- Input Voltage Range (V_{IN}) ····· 3.0V to 24.0V (Absolute maximum rating : 36.0V)
- Ripple Rejection(RR) ····· Typ. 60dB (f=1kHz, V_{SET} ≤ 6.0V)
  Typ. 50dB (f=1kHz, V_{SET} > 6.0V)
- Output Voltage Range (V_{OUT}) ····· 3.0V to 18.0V (Internally fixed)
- Output Voltage Accuracy ····· ± 2%
- Products for high temperature environment ··· -40°C to 105°C (Operating Temperature Range)
- Temp. coeff of Output Voltage ····· Typ. ± 100ppm/°C
- Line Regulation ····· Typ. 0.05%/V
- Fold-back Protection Circuit ····· Current limit Typ. 65mA
- Thermal Shutdown Circuit ····· Stops at 160°C.
- Packages ····· HSOP-6J, TO-252-5-P2
- Ceramic capacitors can be used. ····· 10μF or more

(The above shows specification at Topt=25°C. Design assurance value at -40°C ≤ Topt ≤ 105°C is also available. For details, please refer to the datasheet.)

BLOCK DIAGRAM

R1501xxxxB

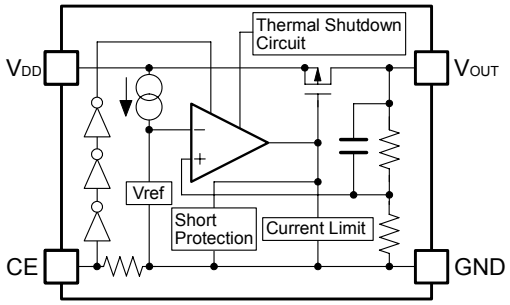

SELECTION GUIDES

Halogen Free	Package	Q'ty per Reel	Part No.
H/F	HSOP-6J	1,000 pcs	R1501S xxx B-E2-FE
H/F	TO-252-5-P2	3,000 pcs	R1501J xxx B-T1-FE

xxx : Specify the output voltage within the range of 3.0V (030) to 12.0V (120) in 0.1V steps and 12.5V (125) to 18.0V (180) in 0.5V steps.

PACKAGES (Top View)

HSOP-6J

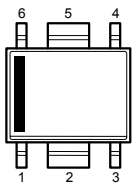

1	VDD
2	GND**
3	GND**
4	CE
5	GND**
6	VOUT

TO-252-5-P2

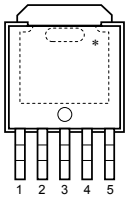

1	VDD
2	GND**
3	GND**
4	CE
5	VOUT

*) The tab is substrate level (GND).
**) The GND pin must be wired together when it is mounted on board.

TYPICAL CHARACTERISTIC

R1501x180B Output Voltage vs. Output Current

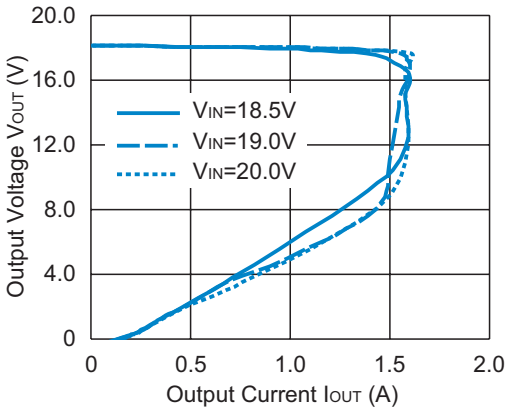

APPLICATIONS

- Power source for home appliances such as refrigerators, rice cookers, electric water warmers, etc
- Power source for laptop personal computers, digital TVs, cordless phones, and private LAN systems for home, etc
- Power source for office equipment machines such as copiers, printers, facsimiles, scanners, etc

1. The products and the product specifications described in this document are subject to change or discontinuation of production without notice for reasons such as improvement. Therefore, before deciding to use the products, please refer to Ricoh sales representatives for the latest information thereon.
2. The materials in this document may not be copied or otherwise reproduced in whole or in part without prior written consent of Ricoh.
3. Please be sure to take any necessary formalities under relevant laws or regulations before exporting or otherwise taking out of your country the products or the technical information described herein.
4. The technical information described in this document shows typical characteristics of and example application circuits for the products. The release of such information is not to be construed as a warranty of or a grant of license under Ricoh's or any third party's intellectual property rights or any other rights.
5. The products listed in this document are intended and designed for use as general electronic components in standard applications (office equipment, telecommunication equipment, measuring instruments, consumer electronic products, amusement equipment etc.). Those customers intending to use a product in an application requiring extreme quality and reliability, for example, in a highly specific application where the failure or misoperation of the product could result in human injury or death (aircraft, spacevehicle, nuclear reactor control system, traffic control system, automotive and transportation equipment, combustion equipment, safety devices, life support system etc.) should first contact us.
6. We are making our continuous effort to improve the quality and reliability of our products, but semiconductor products are likely to fail with certain probability. In order to prevent any injury to persons or damages to property resulting from such failure, customers should be careful enough to incorporate safety measures in their design, such as redundancy feature, fire containment feature and fail-safe feature. We do not assume any liability or responsibility for any loss or damage arising from misuse or inappropriate use of the products.
7. Anti-radiation design is not implemented in the products described in this document.
8. Please contact Ricoh sales representatives should you have any questions or comments concerning the products or the technical information.

RoHS Compliant
Halogen Free

Ricoh is committed to reducing the environmental loading materials in electrical devices with a view to contributing to the protection of human health and the environment.
Ricoh has been providing RoHS compliant products since April 1, 2006 and Halogen-free products since April 1, 2012.

RICOH RICOH ELECTRONIC DEVICES CO., LTD.

http://www.e-devices.ricoh.co.jp/en/

Sales & Support Offices

RICOH ELECTRONIC DEVICES CO., LTD.
Higashi-Shinagawa Office (International Sales)
3-32-3, Higashi-Shinagawa, Shinagawa-ku, Tokyo 140-8655, Japan
Phone: +81-3-5479-2857 Fax: +81-3-5479-0502

RICOH EUROPE (NETHERLANDS) B.V.
Semiconductor Support Centre
Prof. W.H. Keesomlaan 1, 1183 DJ Amstelveen, The Netherlands
Phone: +31-20-5474-309

RICOH ELECTRONIC DEVICES KOREA CO., LTD.
3F, Haesung Bldg, 504, Teheran-ro, Gangnam-gu, Seoul, 135-725, Korea
Phone: +82-2-2135-5700 Fax: +82-2-2051-5713

RICOH ELECTRONIC DEVICES SHANGHAI CO., LTD.
Room 403, No.2 Building, No.690 Bibo Road, Pu Dong New District, Shanghai 201203, People's Republic of China
Phone: +86-21-5027-3200 Fax: +86-21-5027-3299

RICOH ELECTRONIC DEVICES CO., LTD.
Taipei office
Room 109, 10F-1, No.51, Hengyang Rd., Taipei City, Taiwan (R.O.C.)
Phone: +886-2-2313-1621/1622 Fax: +886-2-2313-1623