R1245x Series

1.2A* 30V Input PWM Step-down DC/DC Converter

The R1245x Series are 30V input, CMOS-based PWM step-down DC/DC converters featuring 1.2A*output current. R1245x includes a soft start circuit and latch or fold-back protection circuit. By simply using an inductor, resistors, a diode, and capacitors as external components, a high-efficiency step-down DC/DC converter can be easily configured. Due to current mode PWM control, the R1245x provides a fast response and high efficiency. Ceramic output capacitors can be used. Compared with R1240x, R1245x has a lot of variation of oscillator frequency and can select 330kHz. In case of 330kHz, R1245x can set V_{OUT} lower than R1240x. The oscillator maximum duty cycle (Min.) of R1245x is larger than R1240x, so it is suitable for low dropout voltage situation. The noise characteristic has been improved rather than R1240x, and voltage accuracy is also improved. In addition to HSOP-8E package can be selected, so R1245S is suitable for high power dissipation case.

*) These products are suitable for automotive applications. For details, please refer to our "ELECTRONIC DEVICE PRODUCT CATALOG FOR AUTOMOTIVE" or contact us.

FEATURES

- Supply Current (I_{DD}) ····· Typ. 500µA (No switching)
- Standby Current ($I_{standby}$) ····· Typ. 0µA (CE="L")
- Input Voltage Range (V_{IN}) ····· 4.5V to 30.0V (Absolute maximum rating : 32.0V)
- Output Voltage Range (V_{OUT}) ····· 0.8V to 27.6V (Externally adjustable) (Feedback voltage : 0.8V)
- Feedback Voltage Accuracy ····· ± 8mV
- Output Current (I_{OUT}) ····· 1.2A*
- Oscillator Frequency (f_{osc}) ····· 330kHz (A/B), 500kHz (C/D), 1MHz (E/F), 2.4MHz (G/H)
- Oscillator Maximum Duty Cycle (Maxduty) ··· Min. 92% (A/B/C/D), Min. 88% (E/F), Min. 76% (G/H)
- Products for high teuperature environment (Operating Temperature Range) ····· -40°C to 105°C
- UVLO Detect Voltage (V_{UVLO}) ····· Typ. 3.8V
- Soft Start Time (t_{start}) ····· Typ. 1ms
- High Side Switch Limit Current ····· Typ. 2A
- Thermal Shutdown Circuit ····· Stops at 160°C.
- Latch Protection Circuit ····· Delay time for protection Typ. 4ms (A/C/E/G)
- Fold-back Protection Circuit ····· Fold-back frequency Typ. 170kHz (B/D) ,Typ. 250kHz (F) Typ. 400kHz (H)
- Packages ····· DFN(PLP)2020-8, SOT-23-6W, HSOP-8E

*) This is an approximate value, because output current depending on conditions and external parts.

BLOCK DIAGRAM

R1245x

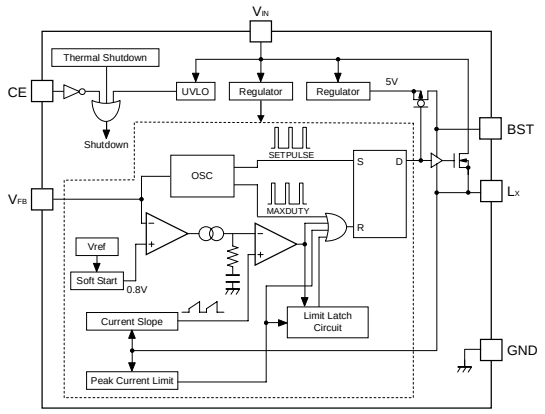

TYPICAL APPLICATION

R1245x00xA/B (V_{OUT}=1.2V, V_{IN}=24.0V)

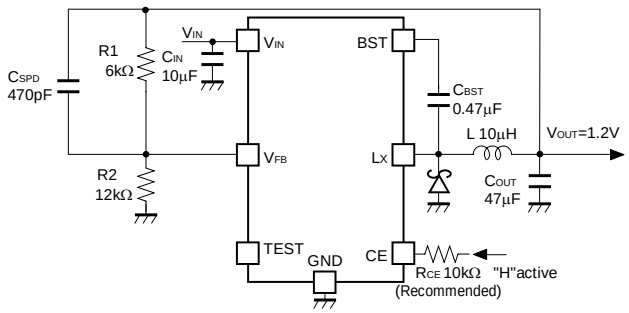

C_{SPD} : Speed-up capacitor
C_{IN}, C_{OUT} : Ceramic capacitors can be used.
C_{BST} : Bootstrap Capacitor
R1, R2 : Resistors for setting output voltage
TEST pin should be open.

SELECTION GUIDES

Halogen Free	Package	Q'ty per Reel	Part No.
H/F	DFN(PLP)2020-8	5,000 pcs	R1245K003*-TR
H/F	SOT-23-6W	3,000 pcs	R1245N001*-TR-FE
H/F	HSOP-8E	1,000 pcs	R1245S003*-E2-FE

* : Specify a combination of the oscillator frequency and the protection circuit.
(A) 330kHz, Latch type (B) 330kHz, Fold-back type
(C) 500kHz, Latch type (D) 500kHz, Fold-back type
(E) 1MHz, Latch type (F) 1MHz, Fold-back type
(G) 2.4MHz, Latch type (H) 2.4MHz, Fold-back type

PACKAGES

DFN(PLP)2020-8

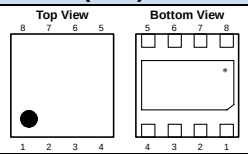

1	Lx	5	GND
2	V_{IN}***	6	V_{FB}
3	V_{IN}***	7	TEST**
4	CE	8	BST

SOT-23-6W

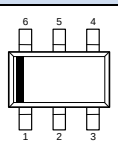

1	BST
2	GND
3	V_{FB}
4	CE
5	V_{IN}
6	Lx

HSOP-8E

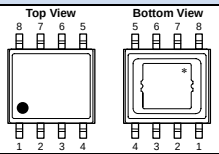

1	Lx	5	GND
2	V_{IN}	6	V_{FB}
3	CE	7	NC
4	TEST**	8	BST

*) The tab is substrate level (GND).
**) TEST pin should be open.
***) The V_{IN} pin must be wired together when it is mounted on board.

TYPICAL CHARACTERISTIC

R1245x00xA/B Efficiency vs. Output Current

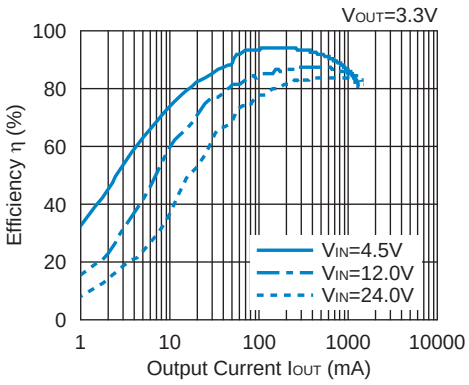

APPLICATIONS

- Power source for digital home appliances such as digital TVs and DVD players
- Power source for office automation equipment such as printers and fax machines
- Power source for hand-held communication equipment, cameras, and VCRs
- Power source for battery-powered equipment

1.2A* 30V Input PWM Step-down DC/DC Converter

R1245x Series / R1240x Series
Step-down DC/DC Converter Comparison

	R1245x Series		R1240x Series	
Control	Fixed PWM		Fixed PWM	
Oscillator Frequency (Typ.)	330kHz (A/B) 500kHz (C/D) 1MHz (E/F) 2.4MHz (G/H)		1.25MHz	
Oscillator Maximum Duty Cycle (Min.)	92% (A/B) 95% (C/D) 90% (E/F) 80% (G/H)		75%	
Soft-start Time (Typ.)	1ms		0.4ms	
Latch Protection Circuit Delay time for protection (Typ.)	4ms (A/C/E/G)		2ms (A)	
Fold-back Protection Circuit Fold-back frequency (Typ.)	170kHz (B/D) 250kHz (F) 300kHz (H)		310kHz (B)	
Package	DFN(PLP)2020-8 SOT-23-6W* HSOP-8E		DFN(PLP)2527-10 SOT-23-6W*	
Version	Latch Protection Circuit	Fold-back Protection Circuit	A : Latch Protection Circuit	B : Fold-back Protection Circuit
	A : 330kHz C : 500kHz E : 1MHz G : 2.4MHz	B : 330kHz D : 500kHz F : 1MHz H : 2.4MHz		

*) R1245N and R1240N are the same pin-layout, but these are upside down.

RoHS Compliant
Halogen Free

Ricoh is committed to reducing the environmental loading materials in electrical devices with a view to contributing to the protection of human health and the environment.
Ricoh has been providing RoHS compliant products since April 1, 2006 and Halogen-free products since April 1, 2012.

RICOH
RICOH ELECTRONIC DEVICES CO., LTD.

http://www.e-devices.ricoh.co.jp/en/

RICOH ELECTRONIC DEVICES CO., LTD.
Higashi-Shinagawa Office (International Sales)
3-32-3, Higashi-Shinagawa, Shinagawa-ku, Tokyo 140-8655, Japan
Phone: +81-3-5479-2857 Fax: +81-3-5479-0502

The currently available information as of September 2014 is provided in this New Product News.