R1190x Series

1A 16V Input VR

The R1190x Series are CMOS-based 16V input voltage regulators featuring 1A output. These are suitable for digital home appliances, in which only bipolar types could previously operate. So R1190x contributes to save energy. R1190x has an inrush current limit circuit that limits approximately 300mA when the voltage regulator turns on. It is also possible to set the inrush current limit time by connecting a capacitor with DELAY pin. In addition to TO-252-5-P2 and HSOP-6J packages, a SOT-89-5 package with high-density mounting is available.

∗) R1190x Series are suitable for automotive applications. For details, please refer to our "ELECTRONIC DEVICE PRODUCT CATALOG FOR AUTOMOTIVE" or contact us.

FEATURES

- Supply Current (I_{SS}) ····· Typ. 150μA (V_{IN}=V_{SET}+2.0V)
- Standby Current ($I_{standby}$) ····· Typ. 0.1μA (V_{IN}=16.0V, CE="L")
- Dropout Voltage (V_{DIF}) ····· Typ. 1.1V (I_{OUT}=1A, V_{SET}=5.0V)
- Ripple Rejection (RR) ····· Typ. 60dB (f=1kHz)
- Input Voltage Range (V_{IN}) ····· 3.5V to 16.0V (Absolute maximum rating : 18.0V)
- Output Voltage Range (V_{OUT}) ····· 2.0V to 12.0V (Internally fixed)
- Output Voltage Accuracy ····· ± 1.5%
- Temp. coeff. of Output Voltage ··· Typ. ± 100ppm/°C
- Line Regulation ····· Typ. 0.02%/V
- Fold-back Protection Circuit ····· Current limit Typ. 300mA
- Inrush Current Limit Circuit ····· Typ. 300mA
  (The inrush current limit time can be adjusted with an external capacitor.)
- Thermal Shutdown Circuit ····· Stops at 150°C
- Auto-discharge Function ····· D Version
- Packages ····· SOT-89-5, HSOP-6J, TO-252-5-P2
- Ceramic capacitors can be used. ·· C_{IN}=C_{OUT}=4.7μF or more

(The above shows specification at Topt=25°C. Design assurance value at -40°C ≤ Topt ≤ 85°C is also available. For details, please refer to the datasheet.)

BLOCK DIAGRAMS

R1190xxxxB
(Without Auto-discharge function)

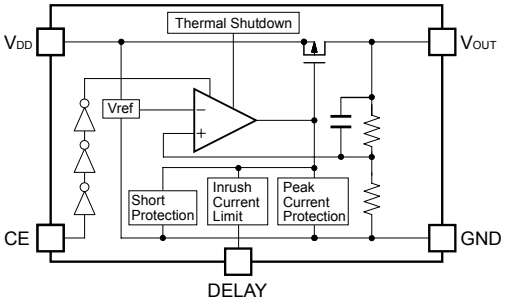

R1190xxxxD
(With Auto-discharge function)

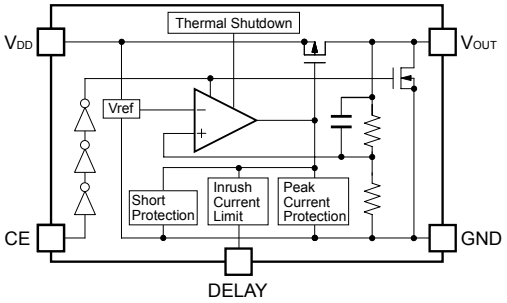

SELECTION GUIDES

Halogen Free	Package	Q'ty per Reel	Part No.
H/F	SOT-89-5	1,000 pcs	R1190Hxxx∗-T1-FE
H/F	HSOP-6J	1,000 pcs	R1190Sxxx∗-E2-FE
H/F	TO-252-5-P2	3,000 pcs	R1190Jxxx∗-T1-FE

xxx : Specify the output voltage within the range of 2.0V (020) to 12.0V (120) in 0.1V steps.
∗ : Select from (B) without auto-discharge function or (D) with auto-discharge function

PACKAGES (Top View)

SOT-89-5

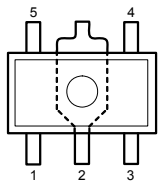

1	VOUT
2	GND
3	CE
4	DELAY
5	VDD

HSOP-6J

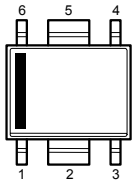

1	VOUT
2	GND
3	CE
4	DELAY
5	GND
6	VDD

TO-252-5-P2

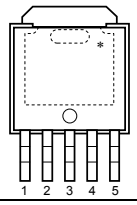

1	DELAY
2	VDD
3	GND
4	VOUT
5	CE

∗) The tab is substrate level (GND).

TYPICAL CHARACTERISTIC

R1190x050x Dropout Voltage vs. Output Current

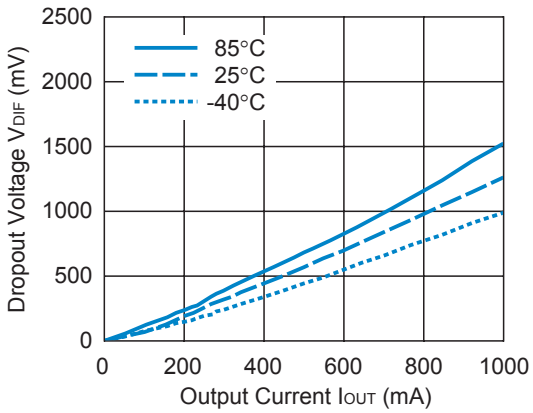

APPLICATIONS

- Power source for digital home appliances
- Power source for audio visual equipment

1. The products and the product specifications described in this document are subject to change or discontinuation of production without notice for reasons such as improvement. Therefore, before deciding to use the products, please refer to Ricoh sales representatives for the latest information thereon.
2. The materials in this document may not be copied or otherwise reproduced in whole or in part without prior written consent of Ricoh.
3. Please be sure to take any necessary formalities under relevant laws or regulations before exporting or otherwise taking out of your country the products or the technical information described herein.
4. The technical information described in this document shows typical characteristics of and example application circuits for the products. The release of such information is not to be construed as a warranty of or a grant of license under Ricoh's or any third party's intellectual property rights or any other rights.
5. The products listed in this document are intended and designed for use as general electronic components in standard applications (office equipment, telecommunication equipment, measuring instruments, consumer electronic products, amusement equipment etc.). Those customers intending to use a product in an application requiring extreme quality and reliability, for example, in a highly specific application where the failure or misoperation of the product could result in human injury or death (aircraft, spacevehicle, nuclear reactor control system, traffic control system, automotive and transportation equipment, combustion equipment, safety devices, life support system etc.) should first contact us.
6. We are making our continuous effort to improve the quality and reliability of our products, but semiconductor products are likely to fail with certain probability. In order to prevent any injury to persons or damages to property resulting from such failure, customers should be careful enough to incorporate safety measures in their design, such as redundancy feature, fire containment feature and fail-safe feature. We do not assume any liability or responsibility for any loss or damage arising from misuse or inappropriate use of the products.
7. Anti-radiation design is not implemented in the products described in this document.
8. Please contact Ricoh sales representatives should you have any questions or comments concerning the products or the technical information.

RoHS Compliant
Halogen Free

Ricoh is committed to reducing the environmental loading materials in electrical devices with a view to contributing to the protection of human health and the environment.
Ricoh has been providing RoHS compliant products since April 1, 2006 and Halogen-free products since April 1, 2012.

RICOH RICOH ELECTRONIC DEVICES CO., LTD.

http://www.e-devices.ricoh.co.jp/en/

Sales & Support Offices

RICOH ELECTRONIC DEVICES CO., LTD.
Higashi-Shinagawa Office (International Sales)
3-32-3, Higashi-Shinagawa, Shinagawa-ku, Tokyo 140-8655, Japan
Phone: +81-3-5479-2857 Fax: +81-3-5479-0502

RICOH EUROPE (NETHERLANDS) B.V.
Semiconductor Support Centre
Prof. W.H. Keesomlaan 1, 1183 DJ Amstelveen, The Netherlands
Phone: +31-20-5474-309

RICOH ELECTRONIC DEVICES KOREA CO., LTD.
3F, Haesung Bldg, 504, Teheran-ro, Gangnam-gu, Seoul, 135-725, Korea
Phone: +82-2-2135-5700 Fax: +82-2-2051-5713

RICOH ELECTRONIC DEVICES SHANGHAI CO., LTD.
Room 403, No.2 Building, No.690 Bibo Road, Pu Dong New District, Shanghai 201203, People's Republic of China
Phone: +86-21-5027-3200 Fax: +86-21-5027-3299

RICOH ELECTRONIC DEVICES CO., LTD.
Taipei office
Room 109, 10F-1, No.51, Hengyang Rd., Taipei City, Taiwan (R.O.C.)
Phone: +886-2-2313-1621/1622 Fax: +886-2-2313-1623