RICOH

Rx5RZ SERIES

LOW DROPOUT AND LOW NOISE VOLTAGE REGULATOR

NO. EA-039-111020

OUTLINE

The Rx5RZ Series are CMOS-based voltage regulator ICs with high output voltage accuracy, low supply current, low dropout voltage and high ripple rejection. Each of these voltage regulator ICs consists of a voltage reference unit, an error amplifier, output voltage setting resistors, a current limit circuit and a chip enable circuit. (Provided two types of chip enable circuit ; “H” active and “L” active, that can be selected when order.) for A/B version. The output voltage of these ICs is fixed with high accuracy.

In addition to low supply current from CMOS process, the Rx5RZ Series may lengthen battery life through low dropout voltage and chip enable function thanks to the built-in low ON resistance transistor. Also when compared with conventional regulators that employ CMOS process, these ICs have superior ripple rejection, input transient response characteristic and load transient response characteristic thus making these product suitable for power supply for hand-held communication equipment.

Since the package for these ICs are the SOT-23-5 package and SOT-89, high density mounting of the ICs on boards is possible.

FEATURES

- Supply Current ..... Typ. 20μA
- Supply Current (Standby) ..... Typ. 0.1μA
- Output Voltage Accuracy..... ±2%
- Ripple Rejection..... Typ. 55dB (f=1kHz)
- Dropout Voltage ..... Typ. 0.2V (I_{OUT}=60mA)
- Temperature-Drift Coefficient of Output Voltage ..... Typ. ± 100ppm/°C
- Line Regulation ..... Typ. 0.05%/V
- Output Voltage Range..... 2.0V to 6.0V (0.1V steps)
  (For other voltages, please refer to MARK INFORMATIONS.)
- Packages ..... SOT-23-5 (Mini-mold), SOT-89 (Mini-power Mold)
- Built-in Fold-Back Protection Circuit ..... Current limit Typ. 50mA

APPLICATIONS

- Power source for battery-powered equipment
- Power source for hand-held communication equipment, cameras, and VCRs
- Power source for home appliances

BLOCK DIAGRAMS

RN5RZxxAA

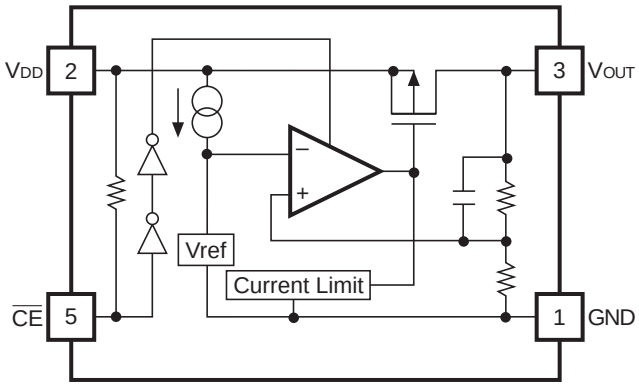

RN5RZxxBA

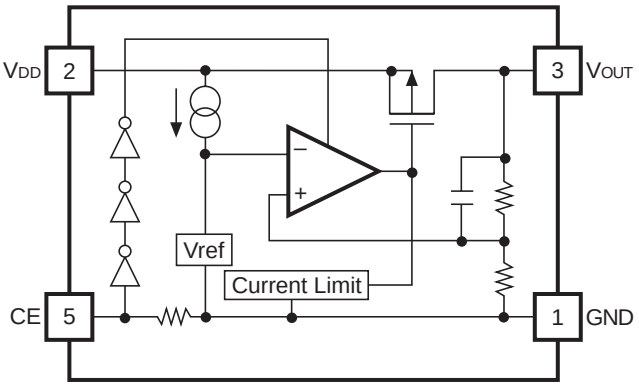

RH5RZxxCA

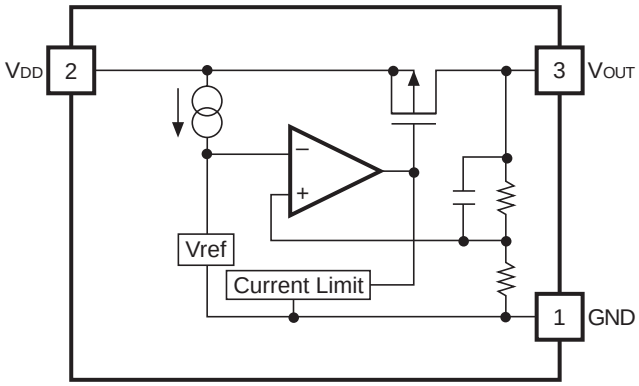

SELECTION GUIDE

The output voltage and package for the ICs can be selected at the user's request.

Product Name	Package	Quantity per Reel	Pb Free	Halogen Free
RN5RZxx∗A-TR-FE	SOT-23-5	3,000 pcs	Yes	Yes
RH5RZxxCA-T1-FE	SOT-89	1,000 pcs	Yes	Yes

xx: The output voltage can be designated in the range from 2.0V (20) to 6.0V (60) in 0.1V steps.
(For other voltages, please refer to MARK INFORMATIONS.)

∗ : CE pin polarity are options as follows
(A) "L" active
(B) "H" active
(C) without chip enable

PIN CONFIGURATION

● **SOT-23-5**

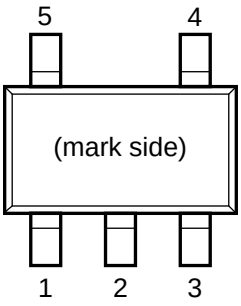

● **SOT-89**

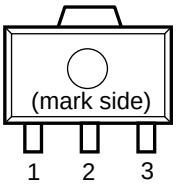

PIN DESCRIPTION

● **SOT-23-5**

Pin No	Symbol	Pin Description
1	GND	Ground Pin
2	V_{DD}	Input Pin
3	V_{OUT}	Output Pin
4	NC	No Connection (Only RN5RZxxA/B)
5	$\overline{CE}$ or CE	Chip Enable Pin (Only RN5RZxxA/B)

● **SOT-89**

Pin No	Symbol	Pin Description
1	GND	Ground Pin
2	V_{IN}	Input Pin
3	V_{OUT}	Output Pin

ABSOLUTE MAXIMUM RATINGS

Symbol	Item	Rating	Unit
V_{IN}	Input Voltage	9.0	V
V_{CE}	Input Voltage ($\overline{CE}$ or CE)	–0.3 to V_{IN}+0.3	V
V_{OUT}	Output Voltage	–0.3 to V_{IN}+0.3	V
I_{OUT}	Output Current	150	mA
P_D	Power Dissipation* (SOT-23-5)	420	mW
	Power Dissipation* (SOT-89)	900	
T_{opt}	Operating Temperature Range	–40 to 85	°C
T_{stg}	Storage Temperature Range	–55 to 125	°C

*) For Power Dissipation, please refer to PACKAGE INFORMATION.

ABSOLUTE MAXIMUM RATINGS

Electronic and mechanical stress momentarily exceeded absolute maximum ratings may cause the permanent damages and may degrade the life time and safety for both device and system using the device in the field.
The functional operation at or over these absolute maximum ratings is not assured.

RECOMMENDED OPERATING CONDITIONS (ELECTRICAL CHARACTERISTICS)

All of electronic equipment should be designed that the mounted semiconductor devices operate within the recommended operating conditions. The semiconductor devices cannot operate normally over the recommended operating conditions, even if when they are used over such conditions by momentary electronic noise or surge. And the semiconductor devices may receive serious damage when they continue to operate over the recommended operating conditions.

ELECTRICAL CHARACTERISTICS

• RN5RZxxA Series

Topt=25˚C

Symbol	Item	Conditions	Min.	Typ.	Max.	Unit
V_{OUT}	Output Voltage	$V_{IN}=V_{OUT}+1V$, $I_{OUT}=30mA$	×0.98		×1.02	V
I_{OUT}	Output Current	$V_{IN}=V_{OUT}+1V$ When $V_{OUT}=V_{OUT}-0.1V$	100			mA
$\frac{\Delta V_{OUT}}{\Delta I_{OUT}}$	Load Regulation	$V_{IN}=V_{OUT}+1V$ $1mA \le I_{OUT} \le 80mA$		20	40	mV
V_{DIF}	Dropout Voltage	$I_{OUT}=60mA$		0.2	0.3	V
I_{SS}	Supply Current	$V_{IN}=V_{OUT}+1V$		20	40	µA
Istandby	Supply Current (Standby)	$V_{IN}=V_{CE}=V_{OUT}+1V$		0.1	1.0	µA
$\frac{\Delta V_{OUT}}{\Delta V_{IN}}$	Line Regulation	$I_{OUT}=30mA$ $V_{OUT}+0.5V \le V_{IN} \le 8.0V$		0.05	0.20	%/V
RR	Ripple Rejection	f=1kHz, Ripple 0.5Vrms $V_{IN}=V_{OUT}+1V$		55		dB
V_{IN}	Input Voltage				8	V
$\frac{\Delta V_{OUT}}{\Delta Topt}$	Output Voltage Temperature Coefficient	$I_{OUT}=30mA$ $-40˚C \le Topt \le 85˚C$		±100		ppm/˚C
I_{lim}	Short Current Limit	$V_{OUT}=0V$		50		mA
R_{PU}	$\overline{CE}$ Pull-up Resistance		2.5	5.0	10.0	MΩ
V_{CEH}	$\overline{CE}$ Input Voltage “H”		1.5			V
V_{CEL}	$\overline{CE}$ Input Voltage “L”		0.00		0.25	V

• RN5RZxxB Series

Topt=25˚C

Symbol	Item	Conditions	Min.	Typ.	Max.	Unit
V_{OUT}	Output Voltage	V_{IN}=V_{OUT}+1V, I_{OUT}=30mA	×0.98		×1.02	V
I_{OUT}	Output Current	V_{IN}=V_{OUT}+1V When V_{OUT}=V_{OUT}–0.1V	100			mA
$\frac{\Delta V_{OUT}}{\Delta I_{OUT}}$	Load Regulation	V_{IN}=V_{OUT}+1V 1mA≤I_{OUT}≤80mA		20	40	mV
V_{DIF}	Dropout Voltage	I_{OUT}=60mA		0.2	0.3	V
I_{SS}	Supply Current	V_{IN}=V_{OUT}+1V		20	40	µA
Istandby	Supply Current (Standby)	V_{IN}=V_{OUT}+1V, V_{CE}=GND		0.1	1.0	µA
$\frac{\Delta V_{OUT}}{\Delta V_{IN}}$	Line Regulation	I_{OUT}=30mA V_{OUT}+0.5V≤V_{IN}≤8.0V		0.05	0.20	%/V
RR	Ripple Rejection	f=1kHz, Ripple 0.5Vrms V_{IN}=V_{OUT}+1V		55		dB
V_{IN}	Input Voltage				8	V
$\frac{\Delta V_{OUT}}{\Delta Topt}$	Output Voltage Temperature Coefficient	I_{OUT}=30mA –40˚C≤Topt≤85˚C		±100		ppm/˚C
I_{lim}	Short Current Limit	V_{OUT}=0V		50		mA
R_{PU}	CE Pull-down Resistance		2.5	5.0	10.0	MΩ
V_{CEH}	CE Input Voltage “H”		1.5			V
V_{CEL}	CE Input Voltage “L”		0.00		0.25	V

• RH5RZxxC Series

Topt=25˚C

Symbol	Item	Conditions	Min.	Typ.	Max.	Unit
V_{OUT}	Output Voltage	V_{IN}=V_{OUT}+1V, I_{OUT}=30mA	×0.98		×1.02	V
I_{OUT}	Output Current	V_{IN}=V_{OUT}+1V	100			mA
$\frac{\Delta V_{OUT}}{\Delta I_{OUT}}$	Load Regulation	V_{IN}=V_{OUT}+1V 1mA≤I_{OUT}≤80mA		20	40	mV
V_{DIF}	Dropout Voltage	I_{OUT}=60mA		0.2	0.3	V
I_{SS}	Supply Current	V_{IN}=V_{OUT}+1V		20	40	µA
$\frac{\Delta V_{OUT}}{\Delta V_{IN}}$	Line Regulation	I_{OUT}=30mA V_{OUT}+0.5V≤V_{IN}≤8.0V		0.05	0.20	%/V
RR	Ripple Rejection	f=1kHz, Ripple 0.5Vrms V_{IN}=V_{OUT}+1V		55		dB
V_{IN}	Input Voltage				8	V
$\frac{\Delta V_{OUT}}{\Delta Topt}$	Output Voltage Temperature Coefficient	I_{OUT}=30mA –40˚C≤Topt≤85˚C		±100		ppm/˚C
I_{lim}	Short Current Limit	V_{OUT}=0V		50		mA

OPERATION

RN5RZxxA

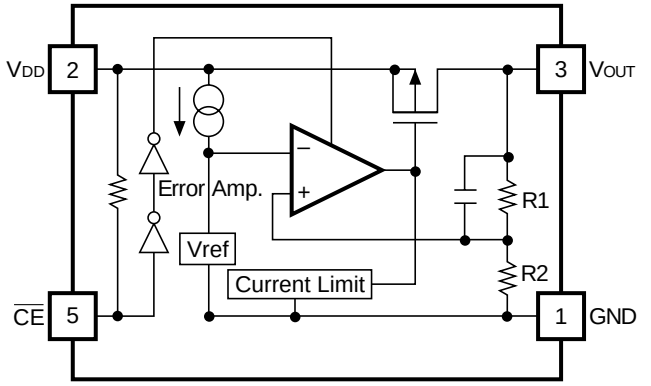

RN5RZxxB

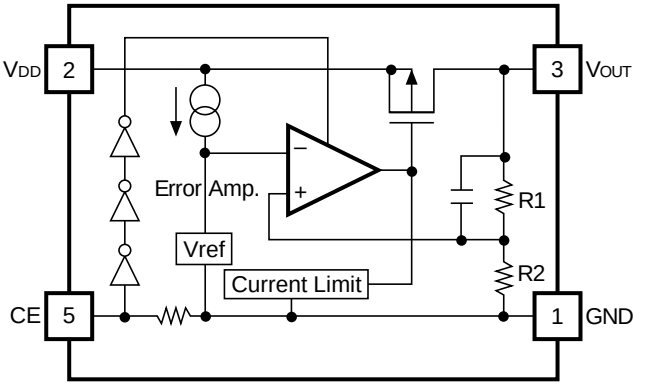

RH5RZxxC

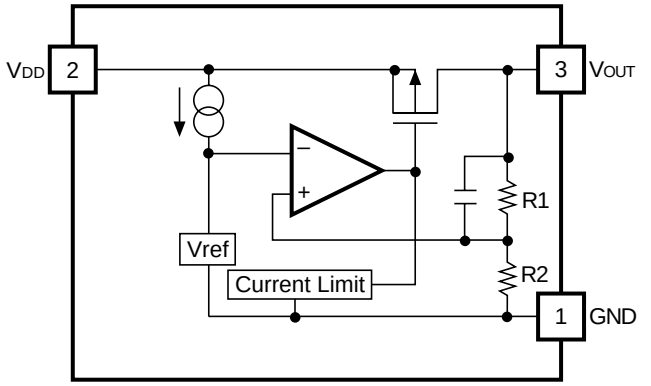

In these ICs, the output voltage VOUT is detected by feed-back registers R1, R2, and the detected output voltage is compared with a reference voltage by an error amplifier, so that a constant voltage is output.

A current limit circuit working for short protection and a chip enable circuit for standby function are included.

TEST CIRCUITS

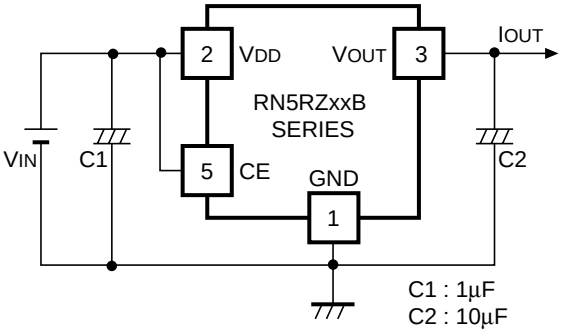

Fig.1 Standard Test Circuit

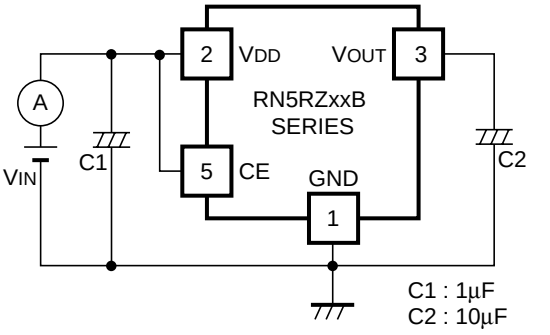

Fig.2 Supply Current Test Circuit

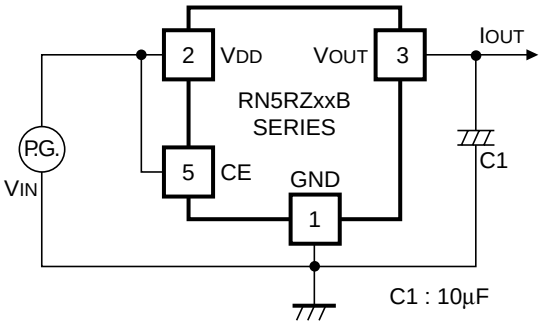

Fig.3 Line Transient Response Test Circuit

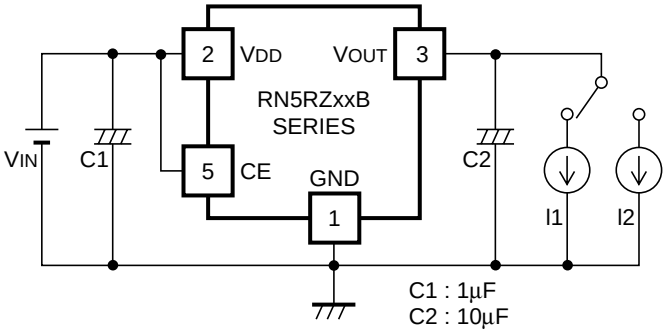

Fig.4 Load Transient Response Test Circuit

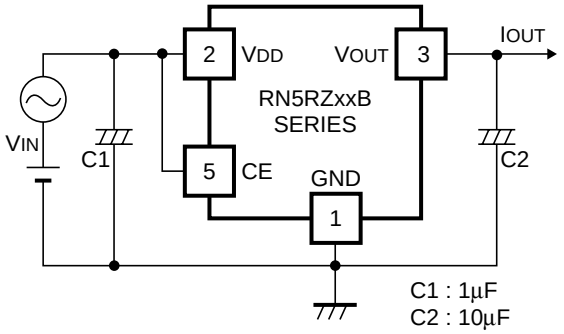

Fig.5 Ripple Rejection Test Circuit

TYPICAL CHARACTERISTICS

1) Output Voltage vs. Output Current

Rx5RZ30x

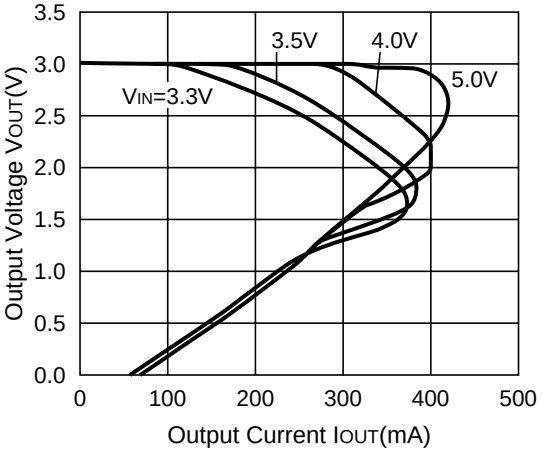

Rx5RZ40x

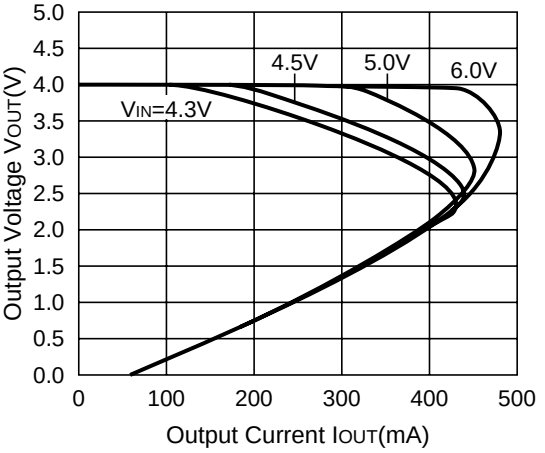

Rx5RZ50x

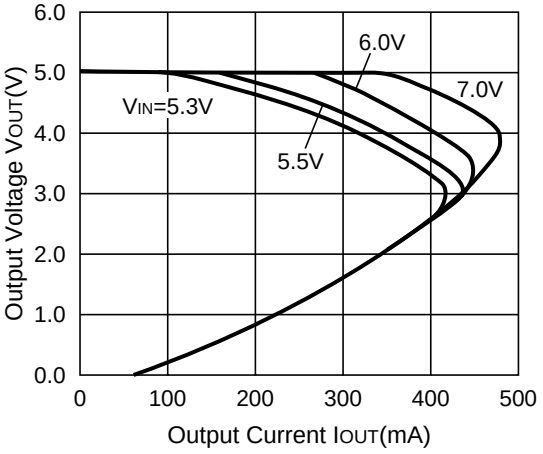

2) Output Voltage vs. Input Voltage

Rx5RZ30x

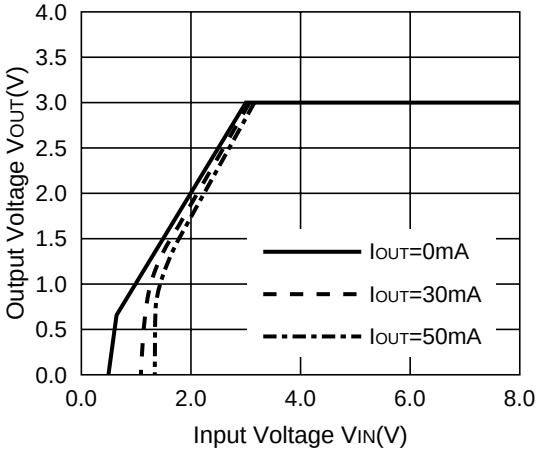

Rx5RZ40x

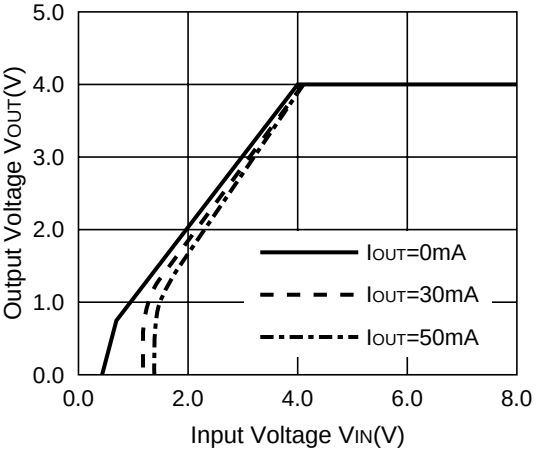

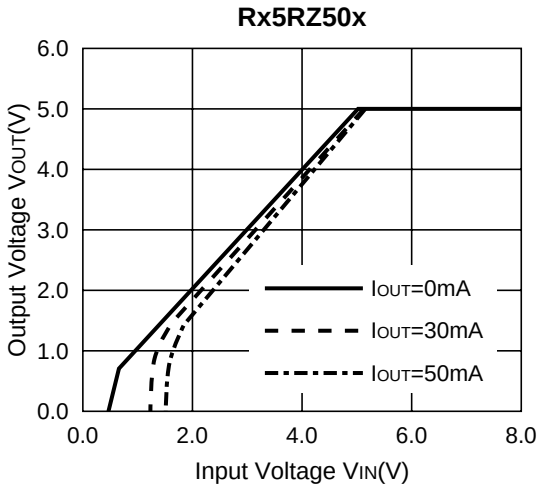

3) Dropout Voltage vs. Output Current

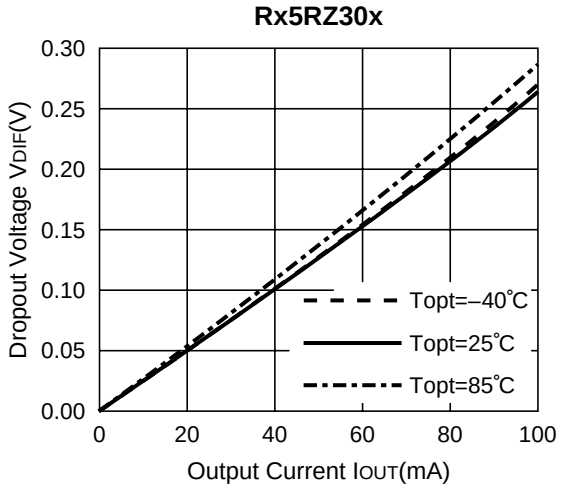

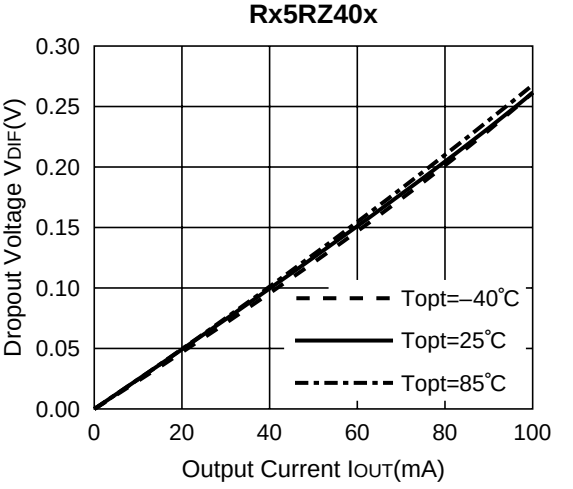

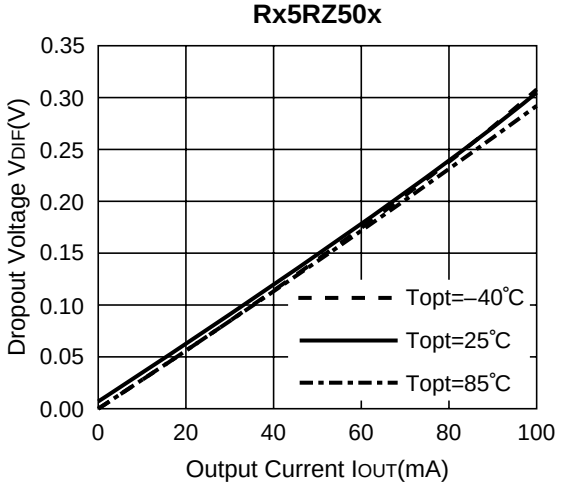

4) Output Voltage vs. Temperature

Rx5RZ30x

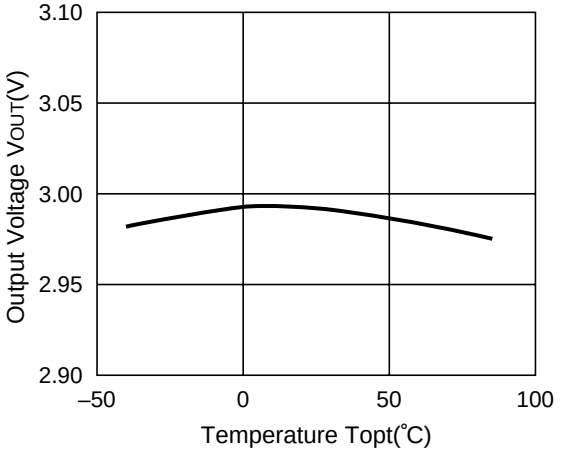

Rx5RZ40x

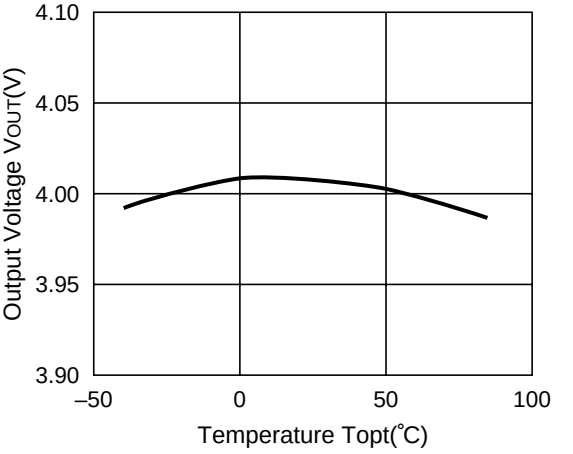

Rx5RZ50x

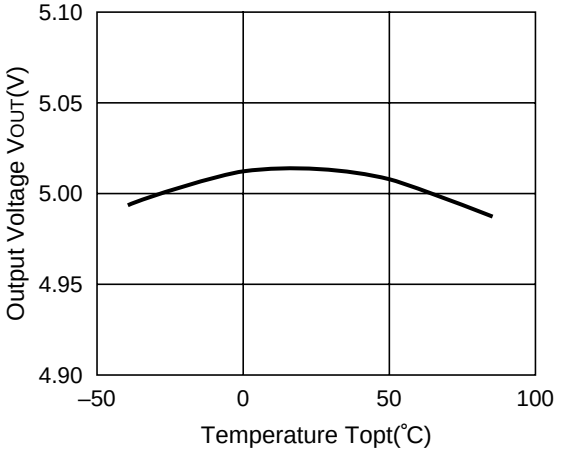

5) Supply Current vs. Input Voltage

Rx5RZ30x

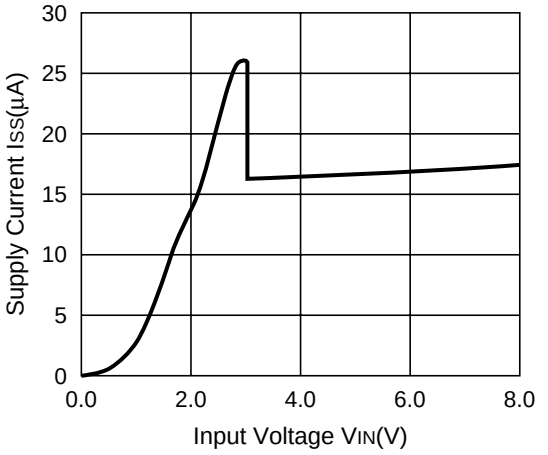

Rx5RZ40x

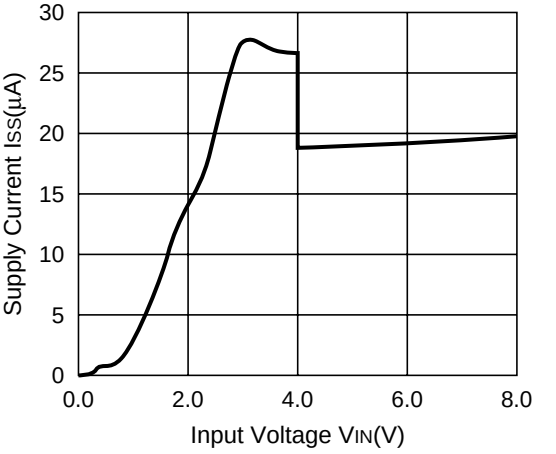

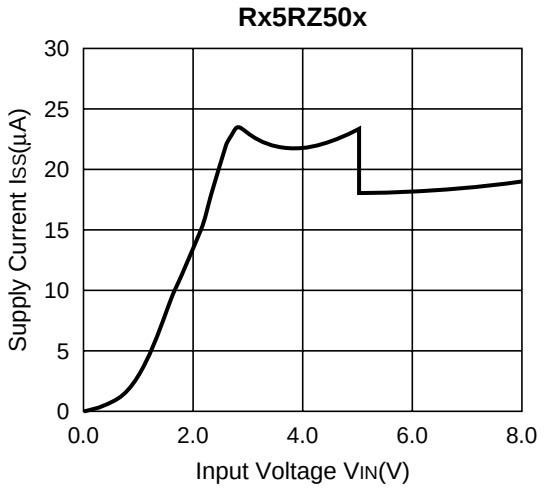

6) Supply Current vs. Temperature

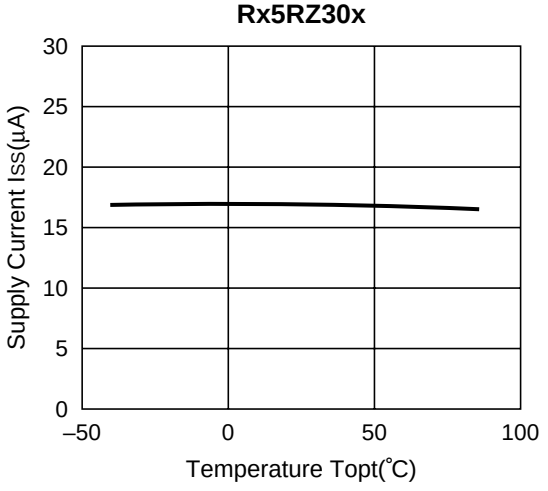

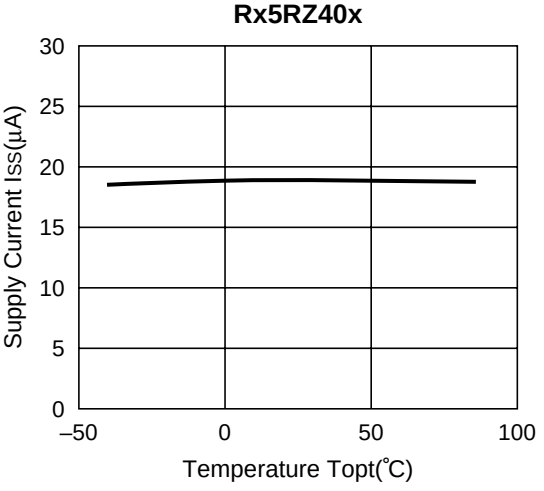

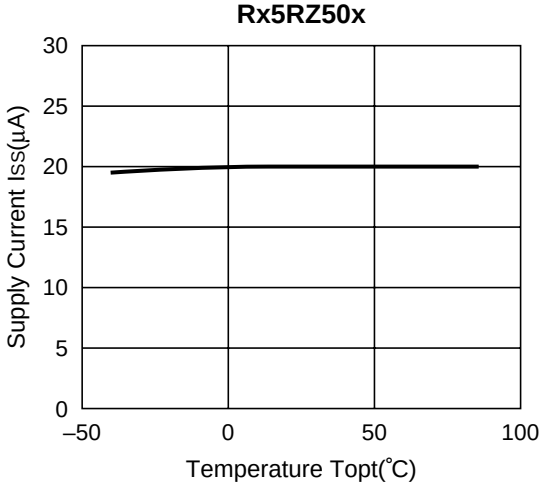

7) Dropout Voltage vs. Set Output Voltage

Rx5RZxxx

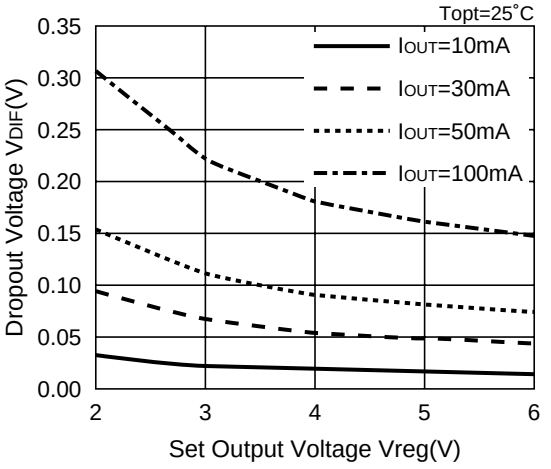

8) Ripple Rejection vs. Frequency

Rx5RZ30x

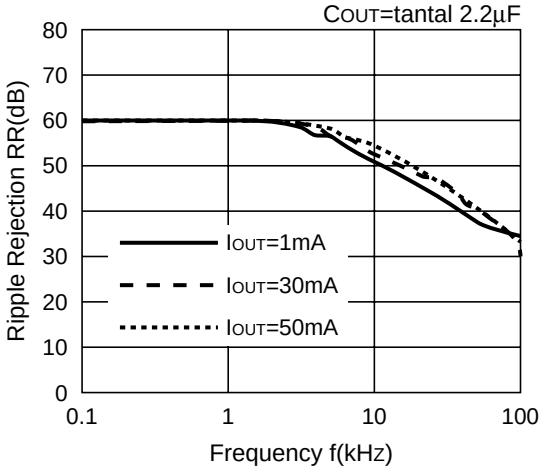

Rx5RZ30x

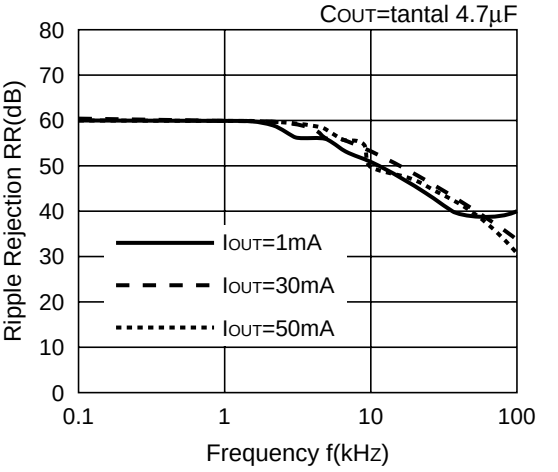

Rx5RZ30x

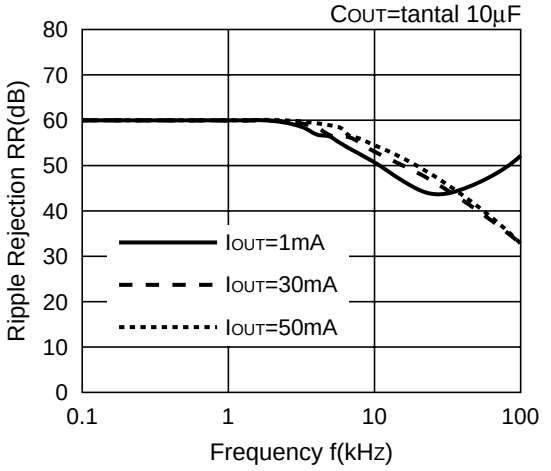

Rx5RZ40x

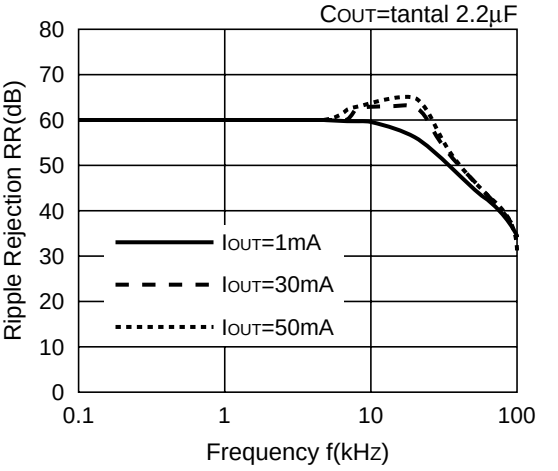

Rx5RZ40x

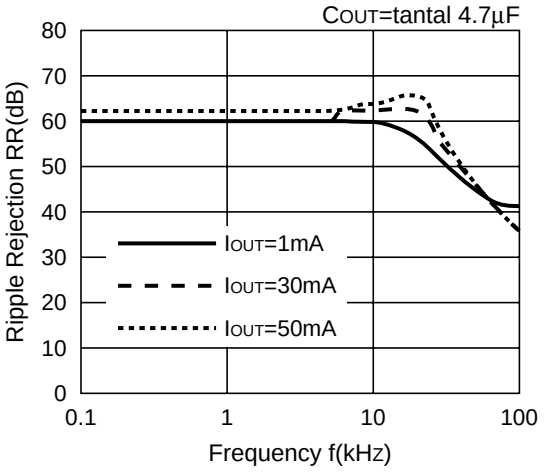

Rx5RZ40x

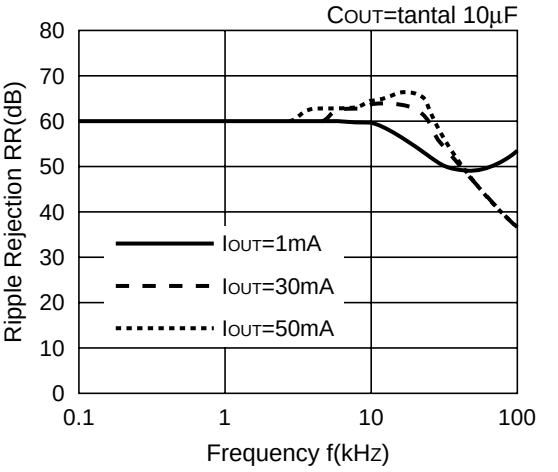

Rx5RZ50x

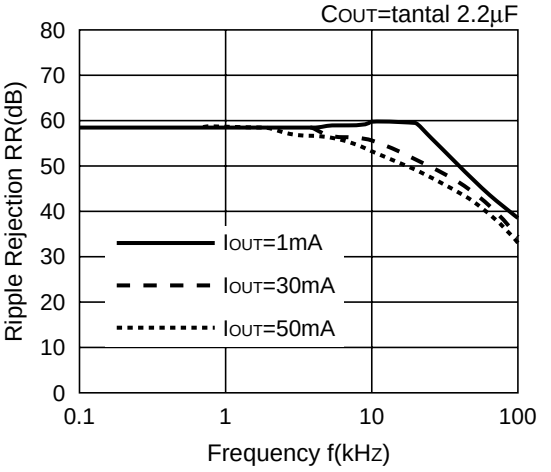

Rx5RZ50x

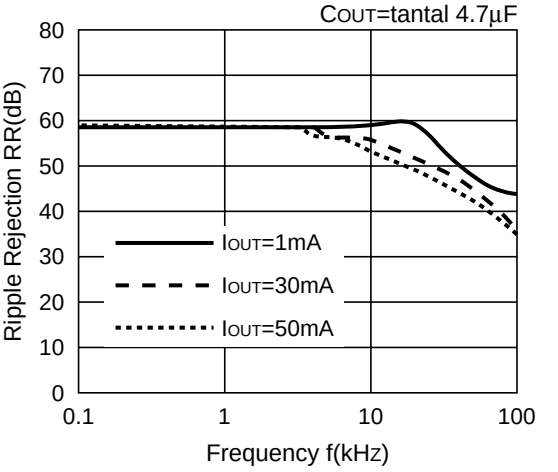

Rx5RZ50x

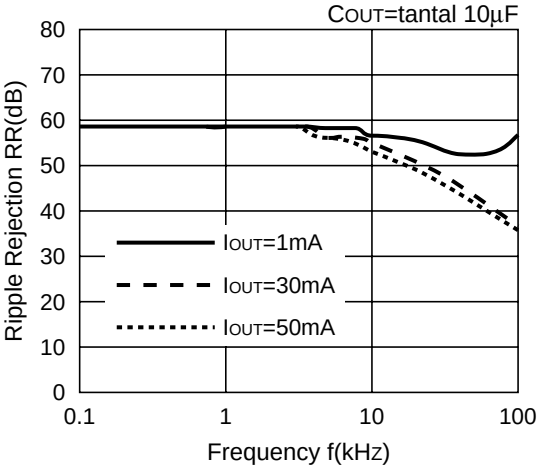

9) Ripple Rejection vs. Input Voltage (DC bias)

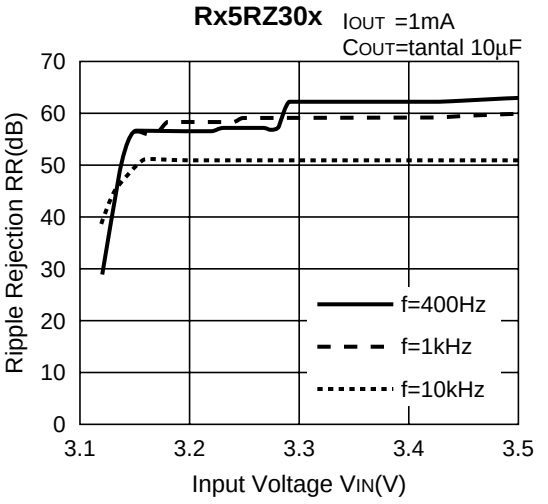

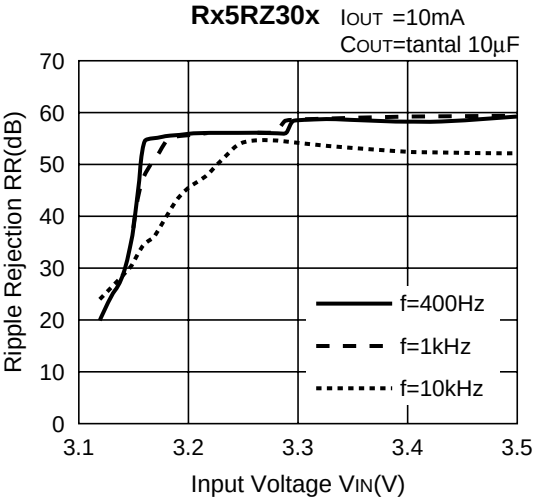

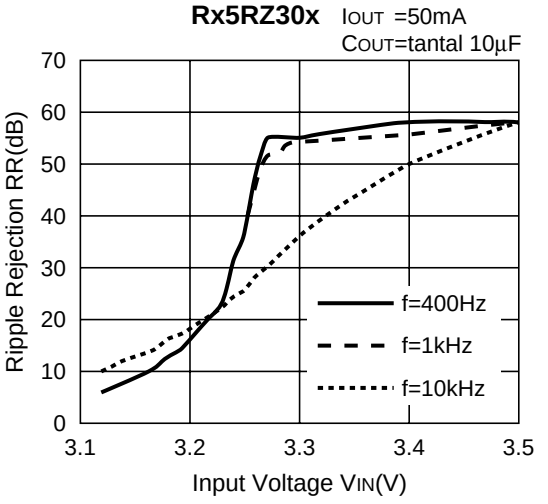

10) Line Transient Response

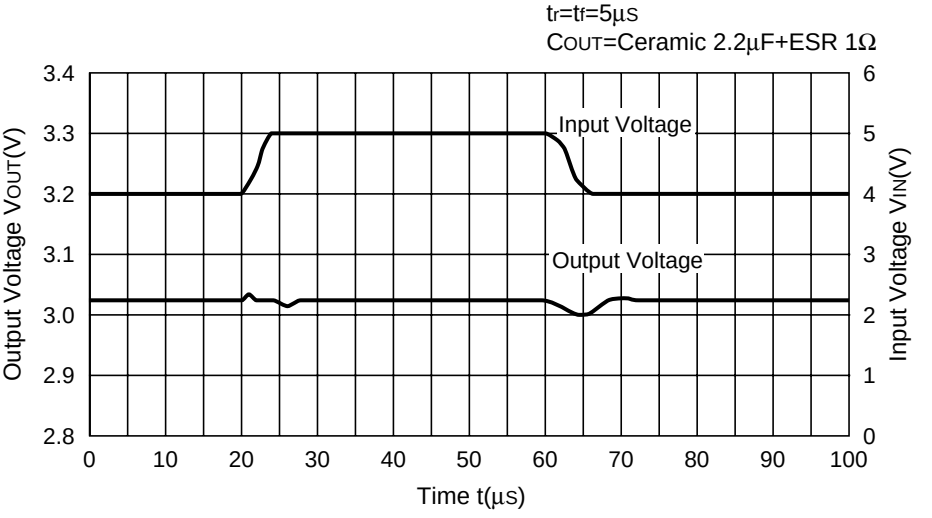

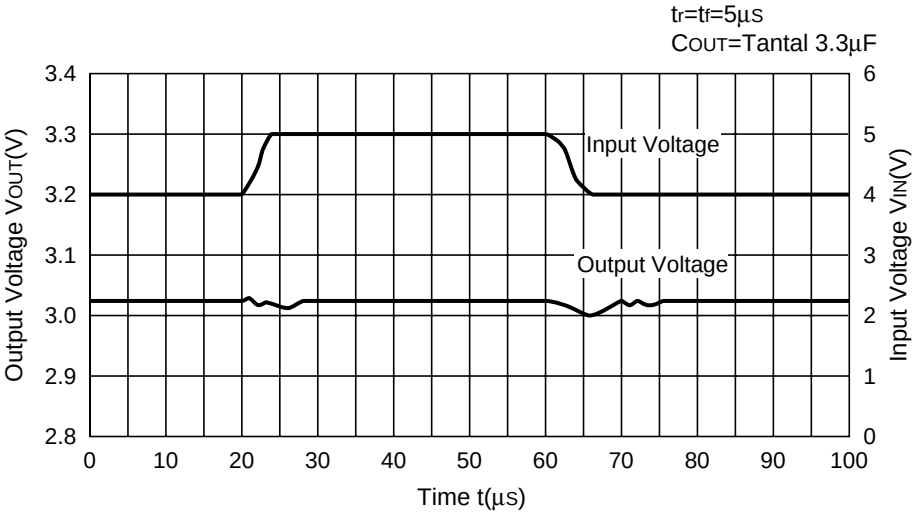

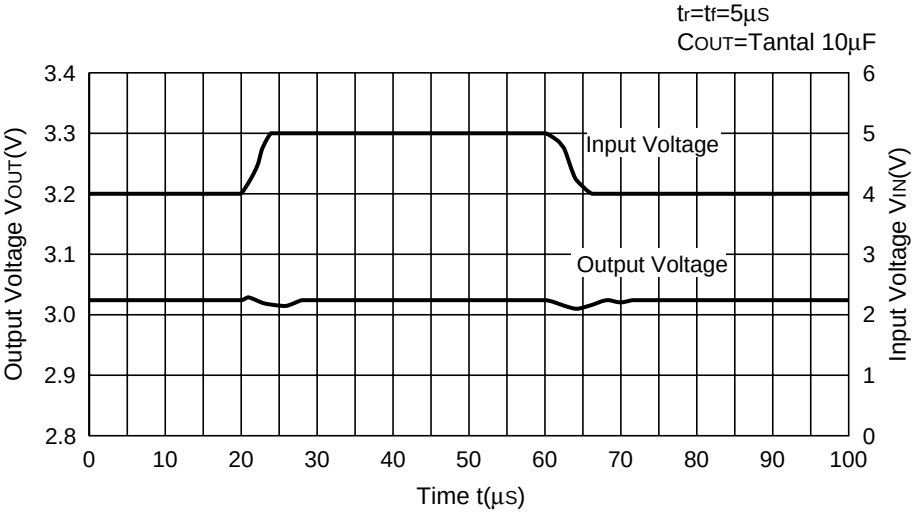

11) Load Transient Response

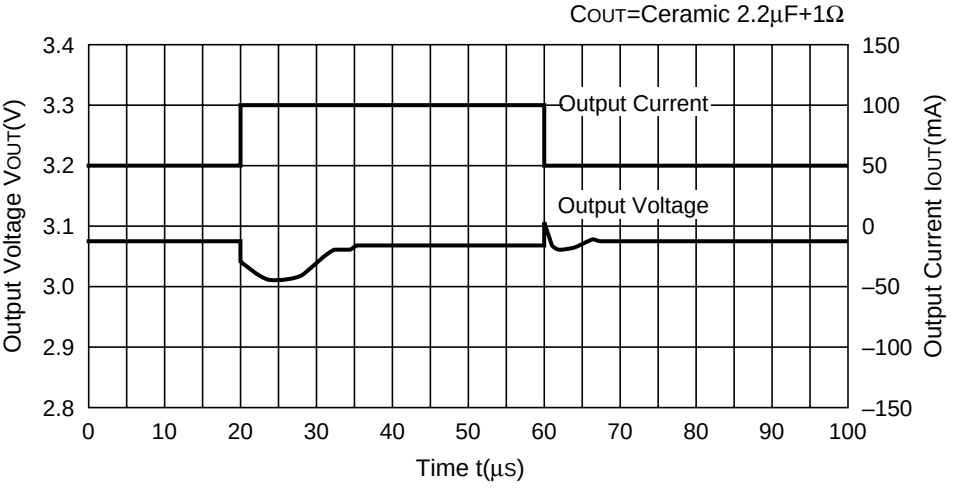

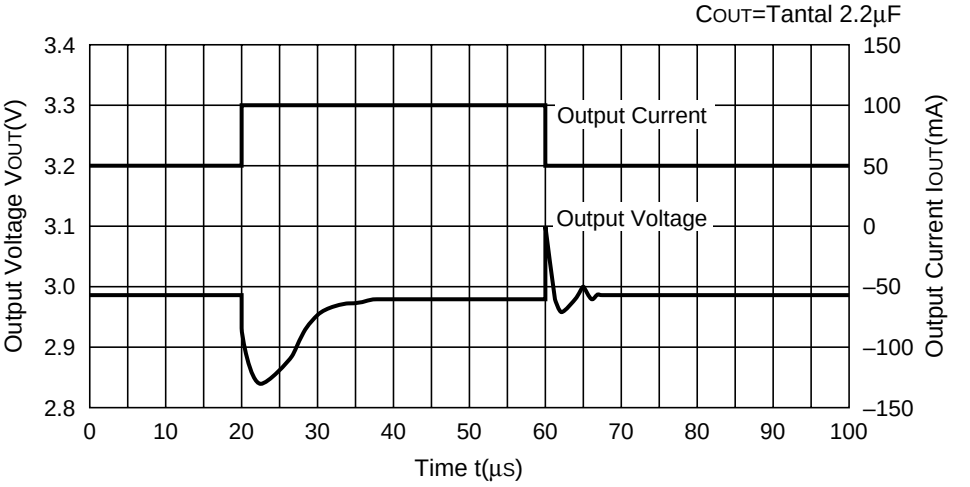
COUT=Tantal 2.2µF
Output Current
Output Voltage
Output Voltage VOUT(V)
Output Current IOUT(mA)
Time t(µs)
3.4
3.3
3.2
3.1
3.0
2.9
2.8
150
100
50
0
–50
–100
–150
0
10
20
30
40
50
60
70
80
90
100

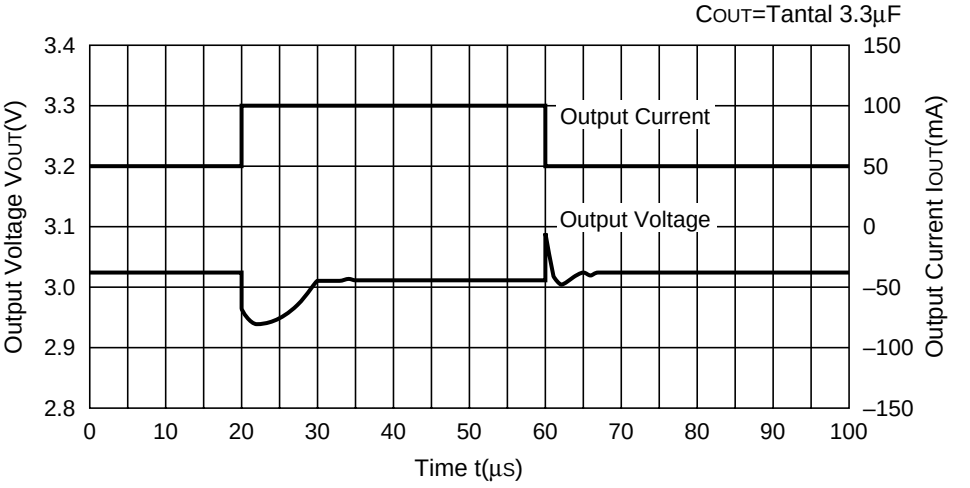
COUT=Tantal 3.3µF
Output Current
Output Voltage
Output Voltage VOUT(V)
Output Current IOUT(mA)
Time t(µs)
3.4
3.3
3.2
3.1
3.0
2.9
2.8
150
100
50
0
–50
–100
–150
0
10
20
30
40
50
60
70
80
90
100

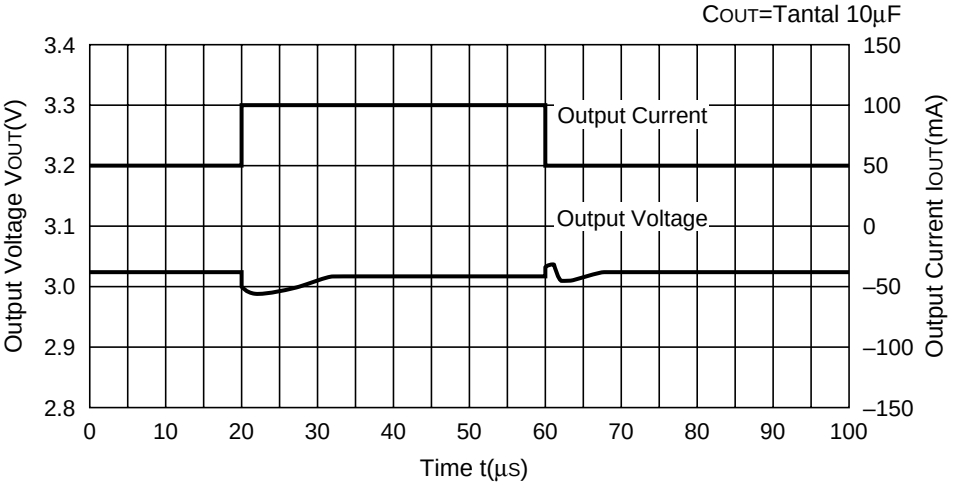
COUT=Tantal 10µF
Output Current
Output Voltage
Output Voltage VOUT(V)
Output Current IOUT(mA)
Time t(µs)
3.4
3.3
3.2
3.1
3.0
2.9
2.8
150
100
50
0
–50
–100
–150
0
10
20
30
40
50
60
70
80
90
100

FOR STABLE OPERATION

• Countermeasure for Noise

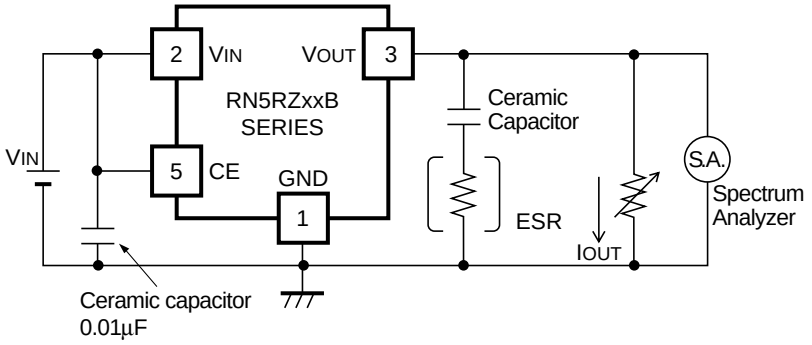

Measuring circuit for white noise ; RN5RZ30B

The relationship between output current (I_{OUT}) and Equivalent Series Resistance (ESR) in the output capacitor is described in the graphs below. The conditions when the noise level is under 40µV (Avg.) are indicated by the hatched area in the graph.

[Measuring conditions]

Frequency band : 0Hz to 1MHz

Temperature : 25˚C

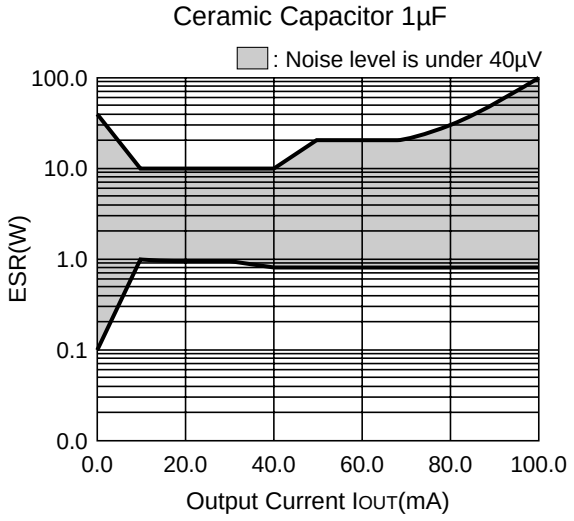

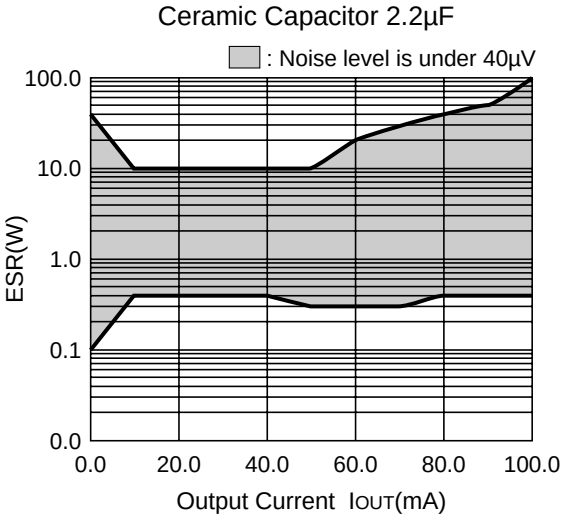

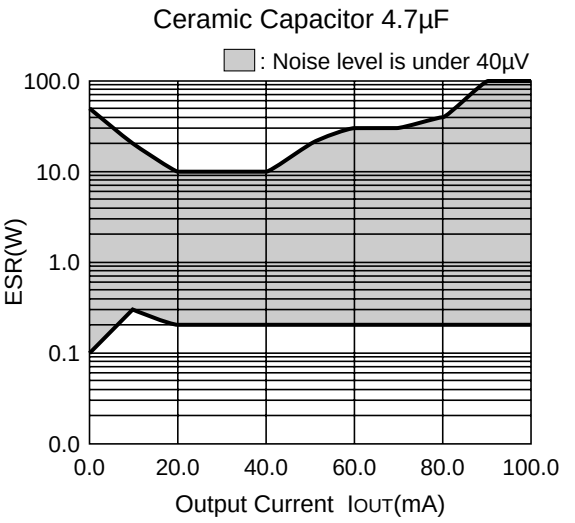

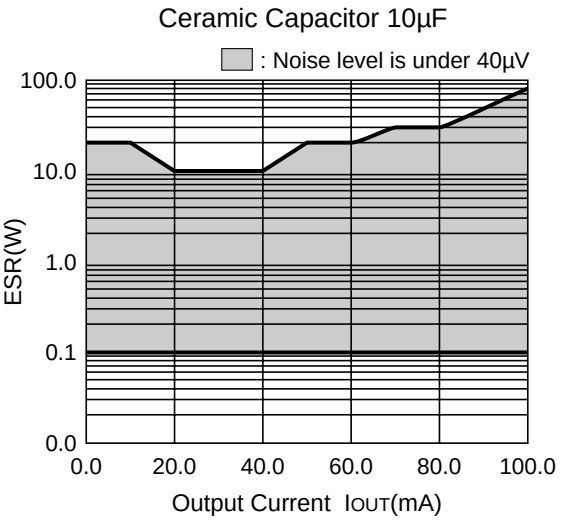

APPLICATION HINTS

When using these ICs, be sure to take care regarding the following points :

- In these ICs, phase compensation is made for securing stable operation even when the load current is varied. For this purpose, be sure to use a capacitor C_{OUT} with good frequency characteristics and ESR in the range described above.
- Make V_{DD} and GND lines sufficient. If their impedance is high, the noise picked up or unstable operation may result.
- Connect the capacitor with a capacitance of about 1µF between V_{DD} and GND with wiring as short as possible.
- Set external components as close as possible to the ICs and make wiring as short as possible.

1. The products and the product specifications described in this document are subject to change or discontinuation of production without notice for reasons such as improvement. Therefore, before deciding to use the products, please refer to Ricoh sales representatives for the latest information thereon.
2. The materials in this document may not be copied or otherwise reproduced in whole or in part without prior written consent of Ricoh.
3. Please be sure to take any necessary formalities under relevant laws or regulations before exporting or otherwise taking out of your country the products or the technical information described herein.
4. The technical information described in this document shows typical characteristics of and example application circuits for the products. The release of such information is not to be construed as a warranty of or a grant of license under Ricoh's or any third party's intellectual property rights or any other rights.
5. The products listed in this document are intended and designed for use as general electronic components in standard applications (office equipment, telecommunication equipment, measuring instruments, consumer electronic products, amusement equipment etc.). Those customers intending to use a product in an application requiring extreme quality and reliability, for example, in a highly specific application where the failure or misoperation of the product could result in human injury or death (aircraft, spacevehicle, nuclear reactor control system, traffic control system, automotive and transportation equipment, combustion equipment, safety devices, life support system etc.) should first contact us.
6. We are making our continuous effort to improve the quality and reliability of our products, but semiconductor products are likely to fail with certain probability. In order to prevent any injury to persons or damages to property resulting from such failure, customers should be careful enough to incorporate safety measures in their design, such as redundancy feature, fire containment feature and fail-safe feature. We do not assume any liability or responsibility for any loss or damage arising from misuse or inappropriate use of the products.
7. Anti-radiation design is not implemented in the products described in this document.
8. The X-ray exposure can influence functions and characteristics of the products. Confirm the product functions and characteristics in the evaluation stage.
9. WLCSP products should be used in light shielded environments. The light exposure can influence functions and characteristics of the products under operation or storage.
10. There can be variation in the marking when different AOI (Automated Optical Inspection) equipment is used. In the case of recognizing the marking characteristic with AOI, please contact Ricoh sales or our distributor before attempting to use AOI.
11. Please contact Ricoh sales representatives should you have any questions or comments concerning the products or the technical information.

RoHS Compliant
Halogen Free

Ricoh is committed to reducing the environmental loading materials in electrical devices with a view to contributing to the protection of human health and the environment.
Ricoh has been providing RoHS compliant products since April 1, 2006 and Halogen-free products since April 1, 2012.

RICOH RICOH ELECTRONIC DEVICES CO., LTD.

http://www.e-devices.ricoh.co.jp/en/

Sales & Support Offices

RICOH ELECTRONIC DEVICES CO., LTD.
Higashi-Shinagawa Office (International Sales)
3-32-3, Higashi-Shinagawa, Shinagawa-ku, Tokyo 140-8655, Japan
Phone: +81-3-5479-2857 Fax: +81-3-5479-0502

RICOH EUROPE (NETHERLANDS) B.V.
Semiconductor Support Centre
Prof. W.H. Keesomlaan 1, 1183 DJ Amstelveen, The Netherlands
Phone: +31-20-5474-309

RICOH INTERNATIONAL B.V. - German Branch
Semiconductor Sales and Support Centre
Oberrather Strasse 6, 40472 Düsseldorf, Germany
Phone: +49-211-6546-0

RICOH ELECTRONIC DEVICES KOREA CO., LTD.
3F, Haesung Bldg, 504, Teheran-ro, Gangnam-gu, Seoul, 135-725, Korea
Phone: +82-2-2135-5700 Fax: +82-2-2051-5713

RICOH ELECTRONIC DEVICES SHANGHAI CO., LTD.
Room 403, No.2 Building, No.690 Bibo Road, Pu Dong New District, Shanghai 201203, People's Republic of China
Phone: +86-21-5027-3200 Fax: +86-21-5027-3299

RICOH ELECTRONIC DEVICES CO., LTD.
Taipei office
Room 109, 10F-1, No.51, Hengyang Rd., Taipei City, Taiwan (R.O.C.)
Phone: +886-2-2313-1621/1622 Fax: +886-2-2313-1623